| INCH-POUND |

MIL-H-43905C
11 July 1990
SUPERSEDING
MIL-H 43905B
20 February 1985

MILITARY SPECIFICATION

HASPS, HIGH SECURITY PADLOCKS

This specification is approved for use by all Departments and Agencies of the Department of Defense

1 SCOPE

1 1 Scope This document covers hasps and hasp T-pin for high security padlocks

1 2 Classification. The hasps will be the following styles, as specified (see 6 2) To aid acquisition efforts, a part identification number (PIN) system is established (see 6 8)

	PIN CODE
Style 1 - Hasp, single door, right hand installation, flat wall	01
Style 2 - Hasp, single door, right hand installation, offset wall	02
Style 3 - Hasp, double sliding or open out doors	03

|Beneficial comments (recommendation, additions, deletions) and any pertinent|
|data which may be of use in improving this document should be addressed to·|
|Commanding Officer (Code 156), Naval Construction Battalion Center, Port|
|Document Improvement Proposal (DD Form 1426) appearing at the end of this|
|document or by letter|

AMSC N/A FSC 5340

DISTRIBUTION STATEMENT A Approved for public release, distribution is unlimited

	PIN CODE
Style 4 - Hasp, single door, left hand installation, offset wall	04
Style 5 - Hasp, single door, left hand installation, flat wall	05
Style 6 - Hasp, universal	06
Style 7 - Hasp, locking "T"	07
Style 8 - Hasp, right hand welded installation	08
Style 9 - Hasp, left hand welded installation	09

2 APPLICABLE DOCUMENTS

2.1 Government documents.

2 1 1 Specifications and standards The following specifications and standards form a part of this document to the extent specified herein Unless otherwise specified, the issues of these documents are those listed in the issue of the Department of Defense Index of Specifications and Standards (DODISS) and supplement thereto, cited in the solicitation (see 6 2)

SPECIFICATIONS

FEDERAL

QQ-P-35 - Treatment for Corrosion-Resistant Steel
PPP-B-566 - Boxes, Folding, Paperboard
PPP-B-601 - Boxes, Wood, Cleated-Plywood
PPP-B-636 - Boxes, Shipping, Fiberboard
PPP-B-676 - Boxes, Setup

MILITARY

MIL-P-116 - Preservation, Methods of
MIL-G-20241 - Gasket Material, Wool Felt, Impregnated, Adhesive, Pressure-Sensitive
MIL-S-81733 - Sealing and Coating Compound, Corrosion Inhibitive

STANDARDS

MILITARY

MIL-STD-105 - Sampling Procedures and Tables for Inspection by Attributes
MIL-STD-129 - Marking for Shipment and Storage
MIL-STD-889 - Dissimilar Metals

(Unless otherwise indicated, copies of federal and military specifications, standards, and handbooks are available from Military Specifications and Standards, Bldg 4D, 700 Robbins Avenue, Philadelphia, PA 19111-5094)

2 1 2 Other Government documents, drawings, and publications The following other Government documents, drawings, and publications form a part of this document to the extent specified herein. Unless otherwise specified, the issues are those cited in the solicitation

DRAWINGS

U S. ARMY BELVOIR RESEARCH, DEVELOPMENT AND ENGINEERING CENTER

13226E6045 - Hasp Style Arrangements, High Security (including parts list)
13226E6062 - Hasp Style 9, (left) High Security.
13226E6063 - Hasp Style 9, (right) High Security.
13226E6064 - Hasp Locking T, Style 7, High Security.
13226E6065 - Shim, Hasp Alignment, High Security
13226E6066 - Installation Instructions, Hasp, High Security
13225E8474 - Plate, Hasp Style 1 (left) High Security
13225E8475 - Bracket, Hasp Style 1,2 (right) High Security
13225E8476 - Bracket, Hasp Style 2, (left) High Security
13225E8477 - Bracket, Hasp Style 3,4,5 (left) High Security
13225E8478 - Bracket, Hasp Style 3 (right) High Security
13225E8479 - Bracket, Hasp Style 4 (right) High Security
13225E8480 - Plate, Hasp Style 5 (right) High Security
13225E8481 - Plate, Hasp Style 6 (left) High Security
13225E8482 - Plate, Hasp Style 6 (right) High Security.
13225E8483 - Bracket, Hasp Style 8 (left) High Security
13225E8484 - Bracket, Hasp Style 8 (right) High Security

(Copies of specifications, standards, handbooks, drawings, publications, and other Government documents are required by contractors in connection with specific acquisition functions should be obtained from the contracting activity or as directed by the contracting officer.)

2 2 Non-Government publications The following document forms a part of this document to the extent specified herein Unless otherwise specified, the issues of the documents which are Department of Defense (DoD) adopted are those listed in the issue of the DODISS cited in the solicitation Unless otherwise specified, the issues of documents not listed in the DODISS are the issues of the documents which is current of the date of the solicitation (see 6 2)

ASTM

ASTM A 240 - Specification for Heat Resisting Chromium and Chromium Nickel Stainless Steel Plate, Sheet, and Strip for Pressure Vessels.

ASTM A 352 - Specification for steel castings, Ferritic and Martensitic, for Pressure-Containing Parts Suitable for Low-Temperature Service.

ASTM A 575 - Specification for Steel Bars, Carbon, Merchant Quality, M-Grades

ASTM B 406 - Test Method for Transverse Rupture Strength of Cemented Carbides

ASTM B 633 - Standard Specification for Electrodeposited Coatings of Zinc on Iron and Steel

ASTM E 30 - Method for Chemical Analysis of Steel, Cast Iron, Open-Hearth Iron, and Wrought Iron

ASTM E 1019 - Methods for determination of Carbon, Sulfur, Nitrogen, Oxygen and Hydrogen in Steel and in Iron, and Cobalt Alloys

ASTM D 3951 - Standard Practice for Commercial Packaging

(Application for copies should be addressed to the ASTM, 1916 Race Street, Philadelphia, PA 19103)

SOCIETY OF AUTOMOTIVE ENGINEERS, INC (SAE)

SAE J 439 Sintered Carbide Tools
SAE J 1072 - Sintered Tool Materials

(Application for copies should be addressed to the Society of Automotive Engineers, Inc , 400 Commonwealth Drive, Warrendale, PA 15096)

(Non-Government standards and other publications are normally available from the organization that prepare or distribute the documents These documents also may be available in or through libraries or other informational services)

2.3 Order of precedence In the event of a conflict between the text of this document and the references cited herein (except for associated detail specifications, specification sheets or MS standards), the text of this specification takes precedence Nothing in this specification, however, supersedes applicable laws and regulations unless a specific exemption has been obtained

3 REQUIREMENTS

3.1 Description The hasps shall be in accordance with Army drawings 13226E6045, 13226E6062 through 13226E6064, 13226E6066, and 13225E8474 through 13225E8475, 13225E8476, 13225E8477, 13225E8478, 13225E8479, 13225E8480, 13225E8484, and as specified herein Army drawing 13226E6045 indicates intended arrangements when utilizing the hasps (see figure 1)

3 1 1 Drawings The drawings forming a part of this specification are end product drawings No deviation from the prescribed dimensions or tolerances is permissible without prior approval of the contracting officer Where tolerances could cumulatively result in incorrect fits, the contractor shall provide tolerances within those prescribed on the drawings to insure correct fit, assembly, and operation of the hasp Any data (e g shop drawings,

layouts, flow sheets, processing procedures, etc) prepared by the contractor or obtained from a vendor to support fabrication and manufacture of the production item shall be made available, upon request, for inspection by the contracting officer or the designated representative.

3 2 First article. When specified (see 6.2), a sample shall be subject to first article inspection (see 4.3 and 6.3).

3.3 Materials. Materials used shall be free from defects which would adversely affect the performance or maintainability of individual components or of the overall assembly Materials not specified herein shall be of the same quality used for the intended purpose in commercial practice. Unless otherwise specified herein, all equipment, material, and articles incorporated in the work covered by this specification are to be new and fabricated using materials produced from recovered materials to the maximum extent possible without jeopardizing the intended use. The term "recovered materials" means materials which have been collected or recovered from solid waste and reprocessed to become a source of raw materials, as opposed to virgin raw materials Unless otherwise specified, none of the above shall be interpreted to mean that the use of used or rebuilt products are allowed under this specification.

3 3.1 Materials Specified Material shall be as specified herein and on the drawing. Plates shall not fracture or crack when bent as specified in the drawings and installation instructions.

3 3 2 Identification of materials and finishes The contractor shall identify the specific material, material finish or treatment for use with components and sub-components, and shall make information available, upon request, to the contracting officer or designated representative.

3.3.3 Material deterioration and control The hasps shall be fabricated from compatible materials, inherently corrosion and deterioration resistant or treated to provide protection against the various forms of corrosion and deterioration that may be encountered in any of the applicable storage and operating environments to which the hasps may be exposed

3.3.3.1 Dissimilar metals Dissimilar metals, as defined in MIL-STD-889, shall be electrically insulated from one another to minimize or prevent galvanic corrosion. Insulation may be provided by an insulating barrier such as a corrosion inhibiting sealant conforming to MIL-S-81733 or chromate tape conforming to MIL-G-20241. Protection against corrosion could also be obtained by exclusion of the electrolyte if feasible

3.4 Alignment shim. The alignment shim used for the installation of all hasps, except style 7, shall conform to Drawing 13226E6065.

3 5 Detailed requirements

3 5 1 Styles 1 thru 6 hasps Style 1, 2, 3, 4, 5, and 6 hasps shall be carbon steel or corrosion resistant steel (CRES) as specified (see 2 1 2 and 6 2).

3 5 2 Style 7 hasp Style 7 hasp shall be carbon steel (see 2 1 2)

3.5 3 Style 8 and 9 hasps Style 8 and 9 hasps shall be CRES (see 2 1 2)

3 6 Identification marking In addition to the marking specified on the drawings, each hasp assembly shall be permanently and legibly stamped, on the face adjacent to where the tungsten carbide wires are imbedded, with the letters "US", and the manufacturer's name or CAGE code, trademark, and Year of manufacture. The markings shall be located no closer than 1/2-inch from the wires, with the long axis of the marking parallel to the wires

3.7 Workmanship The hasp shall be free from burrs, rough and sharp edges, and cracks Installation instructions shall be complete and legible

4 QUALITY ASSURANCE PROVISIONS

4 1 Responsibility for inspection Unless otherwise specified in the contract or purchase order, the contractor is responsible for the performance of all inspection requirements (examinations and tests) as specified herein Except as otherwise specified in the contract or purchase order, the contractor may use his own or any other facilities suitable for the performance of the inspection requirements specified herein, unless disapproved by the Government The Government reserves the right to perform any of the inspections set forth in this specification where such inspections are deemed necessary to ensure supplies and services conform to prescribed requirements

4 1 1 Responsibility for compliance All items shall meet all requirements of sections 3 and 5. The inspection set forth in this specification shall become a part of the contractor's overall inspection system or quality program The absence of any inspection requirements in the specification shall not relieve the contractor of the responsibility of ensuring that all products or supplies submitted to the Government for acceptance comply with all requirements of the contract Sampling inspection, as part of manufacturing operations, is an acceptable practice to ascertain conformance to requirements, however, this does not authorize submission of known defective material, either indicated or actual, nor does it commit the Government to accept defective material

4 2 Classification of inspections The inspection requirements specified herein are classified as follows

a First article inspection (see 4 3)
b Quality conformance inspection (see 4.4)
c Inspection of packaging (see 4 6)

4 3 First article inspection.

4 3 1 Inspection The first article shall be inspected as specified in 4 5 1 and 4 5 2 Presence of one or more defects shall be cause for rejection

4 4 Quality conformance inspection

4 4 1 Sampling Sampling for inspection shall be in accordance with MIL-STD-105 (see 6 6)

4 4 2 Inspection Samples selected in accordance with 4 4 1 shall be examined and tested as specified in 4 5 1 and 4 5 2 The unit of product for examination shall be one hasp with accessories as specified on the installation drawing All units offered for delivery at one time shall be considered a lot for the purpose of inspection (see 6.6)

4 5 Inspection procedure

4 5 1 Examination The hasp shall be examined as specified herein for the following defects.

Major

101 Configuration and dimensions not conforming with the drawings
102 Style not as specified
103 Materials not as specified
104 Materials are not resistant to corrosion and deterioration or treated to be made resistant to corrosion and deterioration for the applicable storage and operating environment
105 Dissimilar metals not insulated from each other as specified
106 Documentation not available for identification of material, material finishes or treatments
107 Used, rebuilt or remanufactured components, pieces, or parts incorporated in the hasps.
108 Alignment shim missing
109 Identification marking missing, incomplete or illegible.
110 Workmanship not as specified

4.5.2 Tests Samples shall be tested as specified in 4.5.2.1 thru 4 5 2 3

4 5 2 1 Tungsten Carbide Wire The wire specified in the drawings shall be tested to determine compliance to SAE J1072

a Remove imbedded wire from sample plates and conduct the hardness test of SAE J439 Hardness shall be 92 on the Rockwell A scale (HRA 92)

b Determine transverse rupture by testing as specified in ASTM B 406 A rupture resistance of 290,000 psi is required.

4.5 2.2 Plate, Steel. Test to determine compliance to the drawings

a. Conduct the chemical analysis test of ASTM E 30, or ASTM E 1019 and ASTM A 352 to determine compliance to the composition requirements of ASTM A 575 M1015-M1020 plate steel The manganese content shall not exceed 0 75 percent

b Conduct the bend test of ASTM E 290 - Arrangement B or C, with in a straight hasp plate to determine resistance to cracking or fracture Make a 90 degree longitudinal semi-guided bend with a maximum 0 16 inch bend radius Fracture of the plate or cracks in the convex surface of the bend constitutes failure Minor hairline cracks at the corners of the bend do not constitute failure

c Conduct the salt spray test as specified in ASTM B 633 to evaluate Zinc coating finish type III for service conditions SC 3

d Provide hydrogen embrittlement relief as specified in ASTM B 633

4 5 2 3 Plate, CRES Test the sample plate to determine compliance to the drawings

a Conduct the chemical analysis test of ASTM E 30 or ASTM E 1019 to determine compliance to ASTM A 240 UNS-S30400 plate

b Conduct the bend test of 4 5 2 2 to determine resistance to fracture or cracking.

c Conduct the salt spray test as specified in QQ-P-35 to evaluate passivation treatment and resistance to corrosion

4 6 Inspection of packaging

4 6 1 Quality conformance inspection of pack

4 6 1 1 Unit of product For the purpose of inspection, a completed pack prepared for shipment shall be considered a unit of product

4 6 1 2 Sampling Sampling for examination shall be in accordance with MIL-STD-105 (see 6 7)

4 6 1 3 Examination Samples selected in accordance with 4 6 1 2 shall be examined for the following defects

Major

111 Materials, methods and containers not as specified Each incorrect material, method or container shall be considered one defect

112 Consolidation not as specified for level A

113 Hasps of unlike style packed together

114 Gross weight or size exceeds that specified.

115 Preservation and packing not in accordance with the requirements of ASTM D 3951 for commercial packaging

116 Marking missing, illegible, incorrect, or incomplete

5 PACKAGING

5 1 Preservation Preservation shall be level A or commercial, as specified (see 6 2)

5 1 1 Level A Each complete hasp assembly shall be preserved in accordance with MIL-P-116, method IC-2, using the contractor's standard commercial box or a close fitting box conforming to PPP-B-566 or PPP-B-676 as the unit container

5 1 1 1 Consolidation Ten hasps, of one style only, shall be consolidated together in a close fitting box conforming to PPP-B-636, W6c style optional

5 1.2 Commercial Each complete hasp assembly shall be preserved in accordance with ASTM D 3951.

5.2 Packing Packing shall be level A, level B, or commercial, as specified (see 6 2)

5 2 1 Level A Hasps of one style only, preserved as specified in 5 1, shall be packed together in a close fitting box conforming to PPP-B-601, overseas type, style optional, in quantities not to exceed 200 pounds Box closure and strapping shall be in accordance with the appendix to the box specification

5 2 2 Level B Hasps of one style only, preserved as specified in 5.1, shall be packed together in a close fitting box conforming to PPP-B-636, V3c, V11c, V13c or V15c, style optional The gross weight or size shall not exceed the limitations of the box specification

5 2 3 Commercial Hasps, preserved as specified in 5 1 shall be packed in accordance with ASTM D 3951

5 3 Marking Marking shall be in accordance with MIL-STD-129

6 NOTES

6 1 Intended use This document covers eight hasps and one hasp T-pin used with high security padlocks Hasp styles 1 through 6 are intended for installation with either fasteners or welding, style 7 is a locking pin, while styles 8 and 9 are intended for installation by welding only

6.2 Ordering data Purchasers should select the preferred options permitted herein and include the following information in acquisition documents

a. Title, number and date of this specification.
b. Style of hasp required (see 1.2).
c When a first article is required for inspection and approval and the number of units required (see 3.2).
d Type steel required (see 3 5.1)
e Level of preservation and packing required (see 5 1 and 5 2)
f Installation instructions required (see 6 9)

6 3 First article When a first article inspection is required, the item should be a preproduction model The first article should consist of one or more units The contracting officer should include specific instructions in acquisition documents regarding arrangements for examinations, test and approval of the first article (see 3 2 and 4 3)

6 4 Subject term (key word) listing

Hasp, single door
Hasp, double door
Hasp, universal
Hasp, locking "T"

6 5 Changes from previous issue Marginal notations are not used in this revision to identify changes with respect to the previous issue due to the extensiveness of the changes

6 6 Sampling for quality inspection Recommended inspection level is S-3 with an AQL of 4 0 percent defective (see 4 4 2)

6 7 Sampling for packaging inspection Recommended inspection level is S-2 with an AQL of 2 5 percent defective (see 4 6 1 2)

6 8 Part or identification number (PIN) The PIN consists of the document prefix (M), document identifier (43905), and PIN code to indicate the style (see 1 2) and material of fabrication

Material	Material code
Carbon steel	A
Corrosion Resistant Steel	B

Example of PIN for style 4 hasp fabricated from stainless steel

```
M      43905     04     B
|      |         |      |
|      |         |      |____Material code (applies to styles 1 thru 6)
|      |         |
|      |         |_____________ ___ _ ____ Style code from 1 2
|      |
|      |_____________________________ Specification Number
|
|_____________________________________ Military Specification
```

6 9 Consideration of data requirements The following data requirements (see 6 9 1) should be considered when this document is applied on a contract To ensure correct contractual application of the data requirements, a Contracts Data Requirements List (DD Form 1423) should be prepared to obtain data, except where DOD FAR Supplement 27 475-1 exempts the requirement for a DD Form 1423

6 9 1 Installations instructions Each hasp should be furnished with a reproduced copy of the hasp installation instructions as shown on Army drawing 13226E6066 (see figure 2, excerpt from drawing 13226E6066) The hasp installation instructions should be legibly reproduced on not less than 2-7/8 inch by 4-7/8 inch white bond paper or a commercial shipping tag of the same dimensions

NOTE. Instructions should emphasize that when the style 6 hasp plates must be bent for installation, the bend should be not less than 90 degrees right (internal) angle and have a minimum 1/2 inch bend radius Use proper bending tools to make the bend, do not use a hammer to make or sharpen the bend

Custodians
Army - ME
Navy - YD
Air Force - 99

Review activities
Army - ER, GL
Navy - SH, NP, OS
Air Force - 82
DLA - IS

User activities
Army - AR, CE
Navy - AS, CG, MC

Preparing activity
Navy - YD

(Project No 5340-1970)

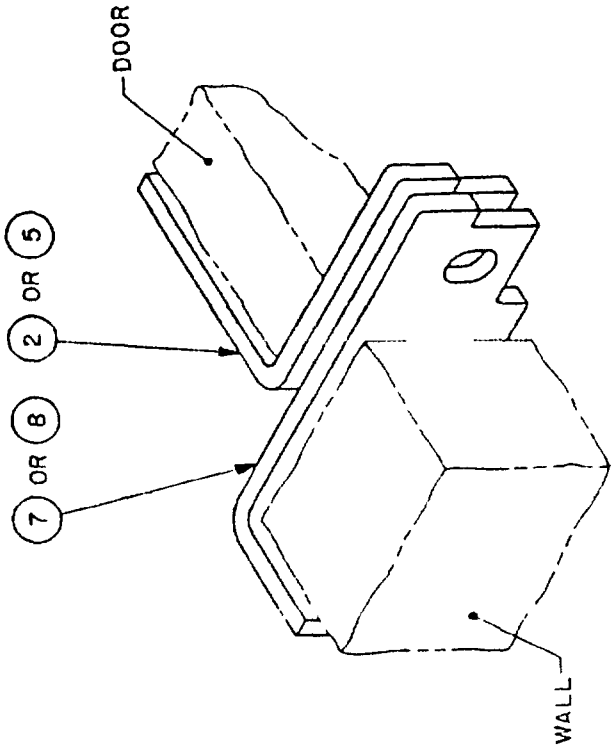

-2A (STL)
-2B (CRES)
STYLE 2 - SINGLE DOOR, RIGHT HAND INSTALLATION, OFF-SET WALL

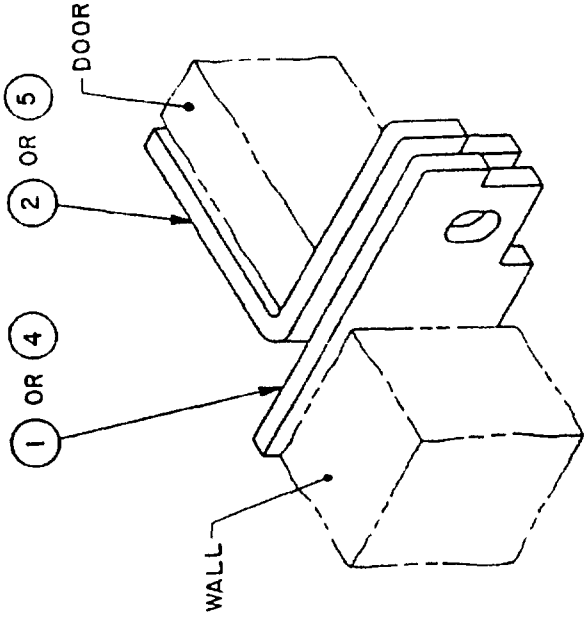

-1A (STL)
-1B (CRES)
STYLE 1 - SINGLE DOOR, RIGHT HAND INSTALLATION, FLAT WALL

FIGURE 1-A Hasp style arrangements

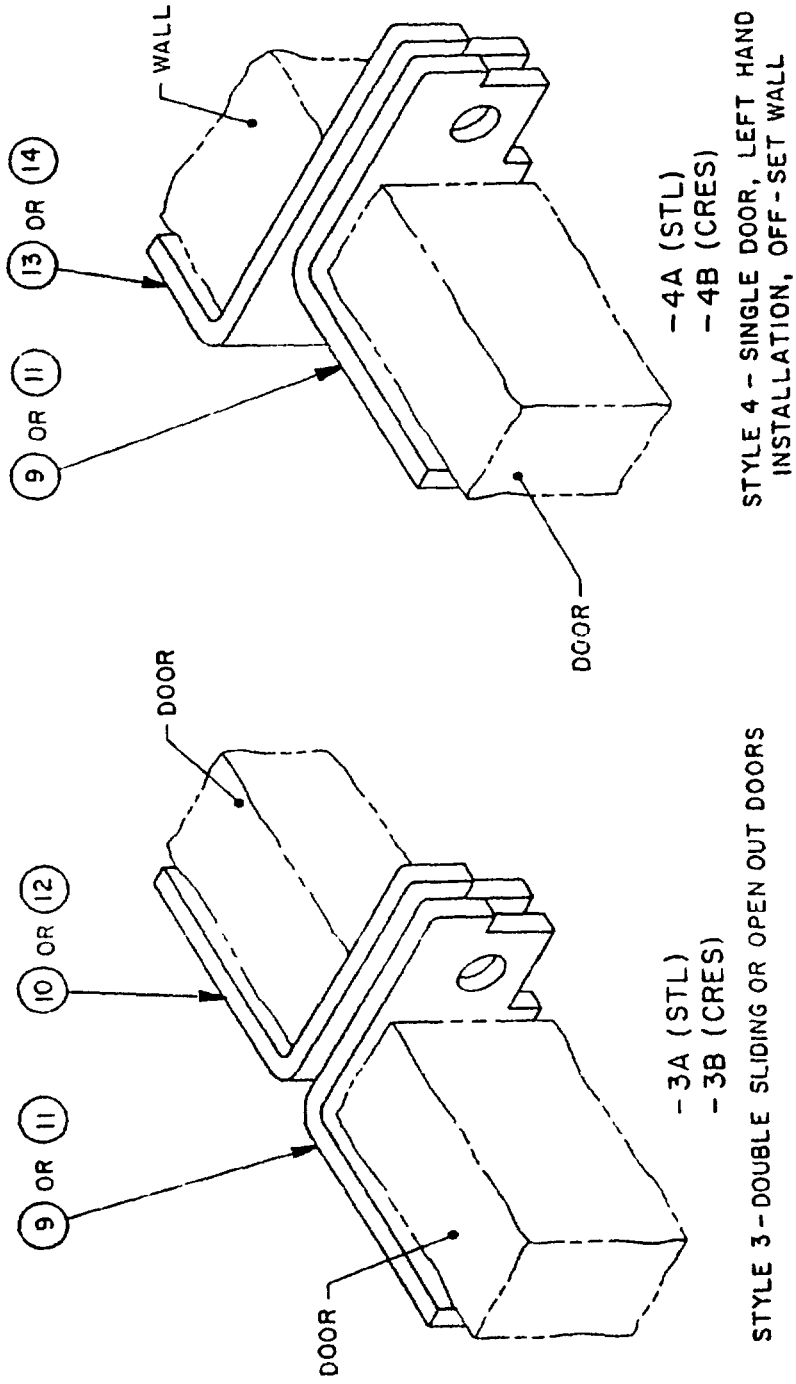

FIGURE 1-B Hasp style arrangements.- (continued)

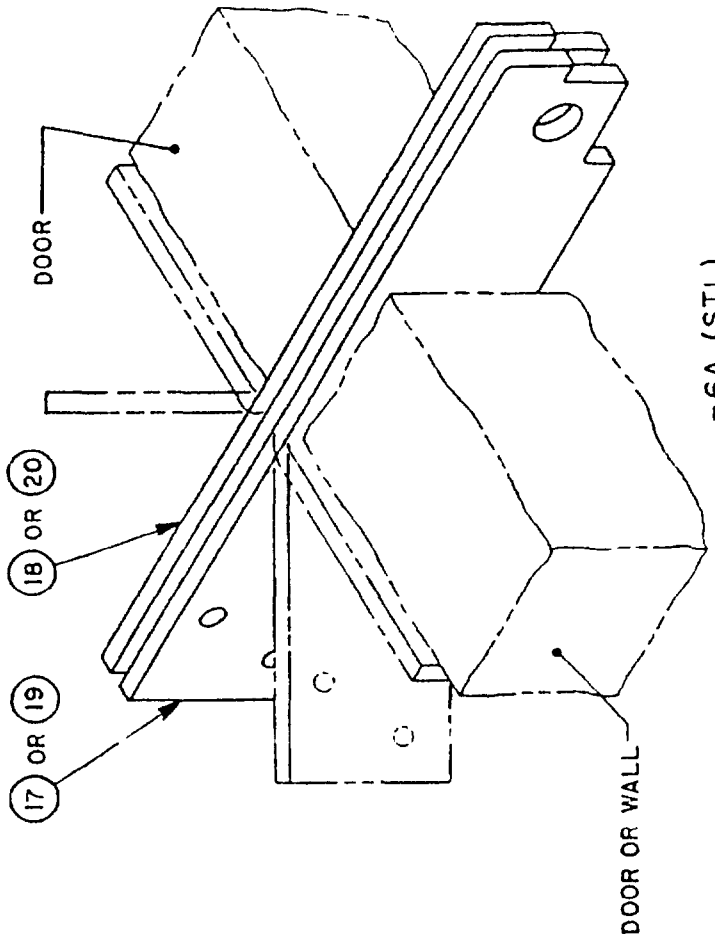

-6A (STL)
-6B (CRES)
STYLE 6 - UNIVERSAL

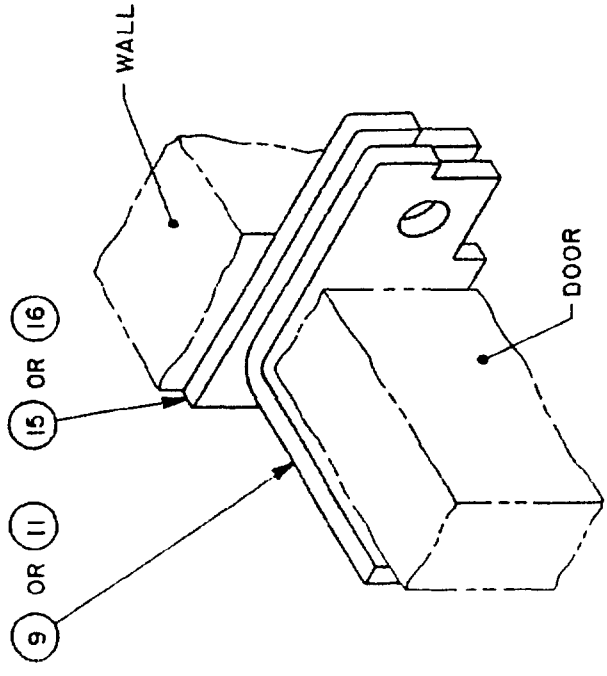

-5A (STL)
-5B (CRES)
STYLE 5 - SINGLE DOOR, LEFT HAND INSTALLATION, FLAT WALL

FIGURE 1-C Hasp style arrangements - (continued)

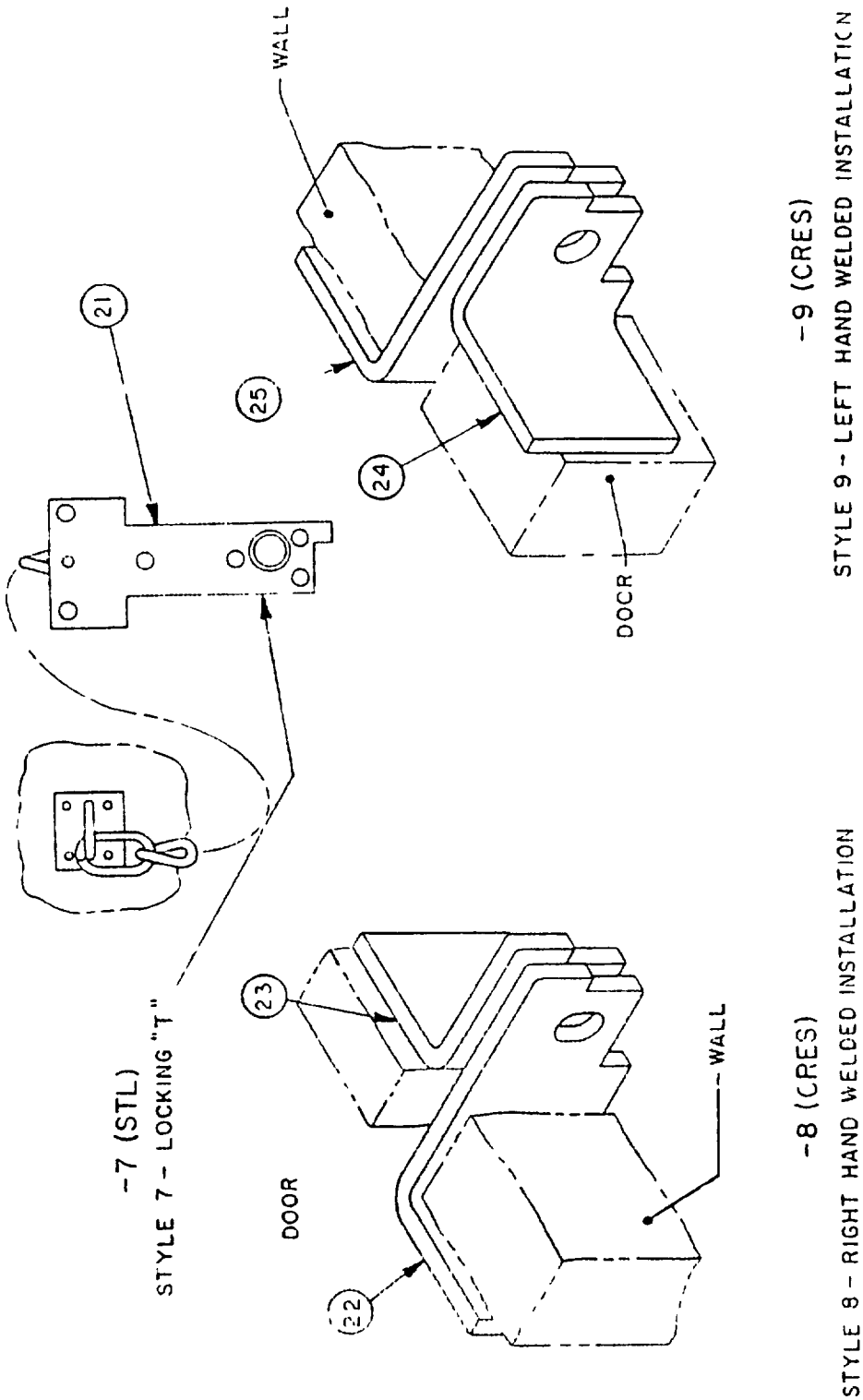

FIGURE 1-D Hasp style arrangements - (continued)

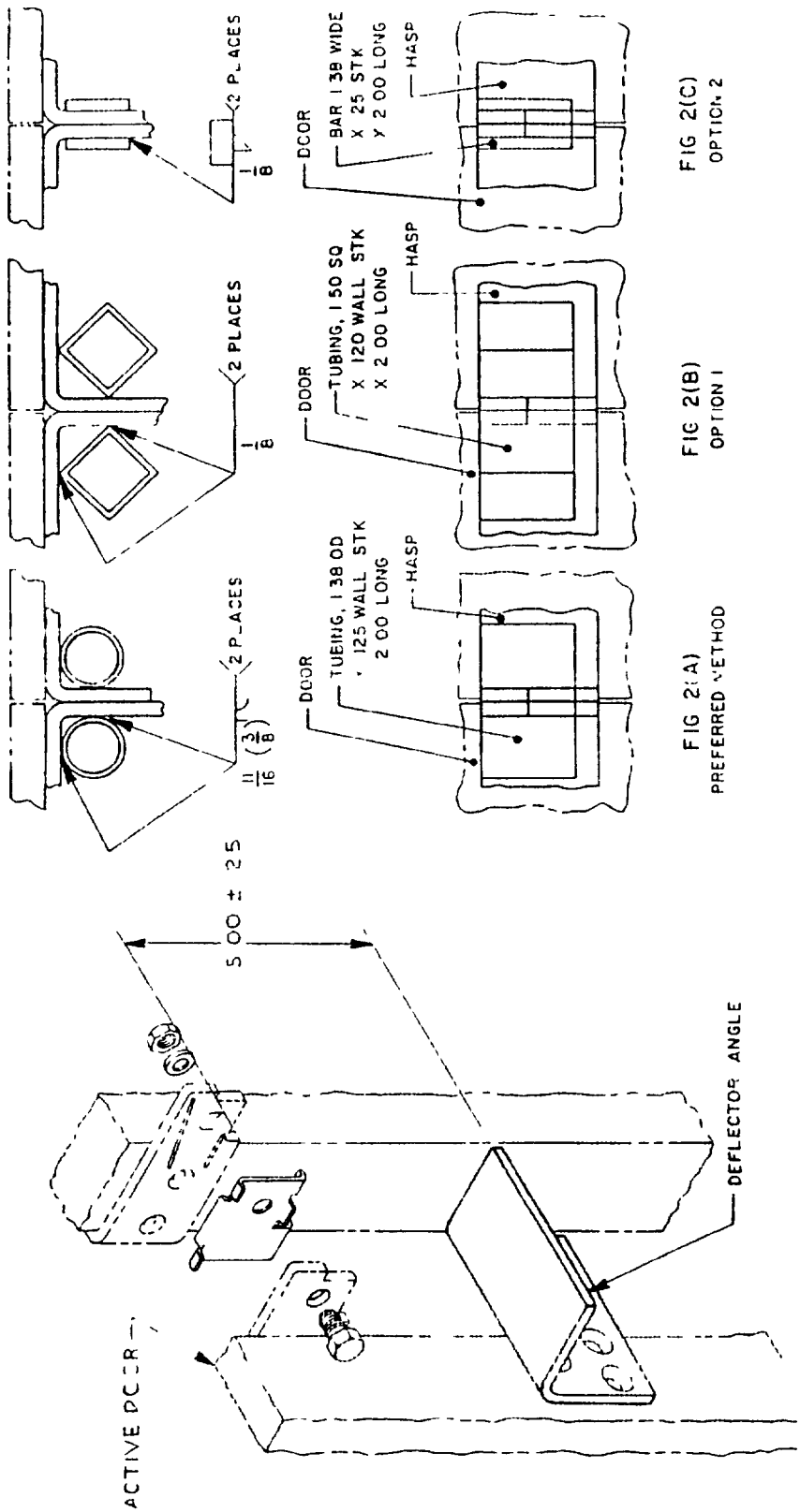

FIGURE 1-F Hasp style arrangements - (continued)
(reinforcements and deflectors)

HASP INSTALLATION PROCEDURES

REMOVE CONTENTS FROM BOX AND CHECK FOR CORRECT STYLE AND QUANTITIES

A THE FOLLOWING APPLIES TO ALL STYLES EXCEPT STYLE 7

1. INSERT SHIM BETWEEN BRACKETS OR PLATES.

2. USE TAPE OR .562 INCH BOLT WITH WASHER AND NUT (NOT SUPPLIED) TO TEMPORARILY ALIGN HASP BRACKETS OR PLATES.

3. MARK OR SCRIBE DESIRED HASP AND DEFLECTOR ANGLE LOCATIONS ON DOORS OR DOOR JAMB (DISASSEMBLE ONLY AS NECESSARY) PROVIDE MOUNTING HOLES, WHERE NECESSARY.

4 DEFORM EDGE OF DOORS OR DOOR AND JAMB,AS NECESSARY,TO PERMIT THE HASP TO BE FLUSH WITH MOUNTING SURFACES,WHERE NECESSARY

NOTES

A DEFLECTOR ANGLE SHALL BE WELDED OR BOLTED BELOW ALL HASPS TO DIMENSION SHOWN IN FIGURE 1 THE IDEAL METHOD OF MOUNTING HASPS AND DEFLECTOR ANGLES IS WELDING DO NOT WELD HASPS OR DEFLECTOR ANGLES TO DOORS LESS THAN 125 INCH THICK DEFLECTOR ANGLES NEED ONLY BE ATTACHED TO THE ACTIVE DOOR AFTER WELDING,PAINT THE AREA TO INHIBIT RUST

5. WHEN WELDING IS NOT EMPLOYED,USE NON-REVERSING OR PENITENTIARY SCREWS (SCREWS ARE NOT SUPPLIED) IN LIEU OF NON-REVERSING OR PENITENTIARY SCREWS REGULAR FLAT HEAD SCREWS MAY BE USED HOWEVER,SCREW HEAD SHALL BE WELDED,OR DEFORMED TO PREVENT REMOVAL OF SCREWS WITH COMMON HAND TOOLS

6 INSTALLATIONS THAT REQUIRE THE WELDING OF THE HASP TO THE FRONT OF THE DOOR,OR THAT HAVE MORE THAN 2 50 INCHES OF THE HASP EXTENDING BEYOND THE FACE OF THE DOOR, EXPOSES A PART OF THE HASP WITHOUT THE PROTECTION OF THE CARBIDE INSERTS. THESE INSTALLATIONS SHALL INCLUDE THE WELDING OF ADDITIONAL CARBON STEEL TO EXTEND THE PENETRATION TIME SEE FIGURE 2(A) THRU 2(C) OF FIGURE 1-D FOR EXAMPLES OF REINFORCEMENT (TUBING AND BAR STOCK ARE NOT SUPPLIED)

7 AFTER INSTALLATION OF HASP,REMOVE SHIM AND DISCARD

FIGURE 2 Installation instructions

B THE FOLLOWING APPLIES TO STYLE 6 (ONLY).

1 PERFORM PROCEDURES A 1 THROUGH A.4 ABOVE

CAUTION

DO NOT USE HAMMER OR ANY EXCESSIVE FORCE TO OBTAIN REQUIRED CLEARANCE OR BEND USE ONLY APPROPRIATE BENDING BRAKES OR JIGS TO MAKE THE BEND AVOID DAMAGE TO CARBIDE WIRES

2 SURFACES WITH CARBIDE WIRES IN PLATES SHALL FACE EACH OTHER AND SHALL PROJECT 1.75 TO 2.50 INCHES BEYOND DOOR

3 WITH HASP IN PLACE,MARK OR SCRIBE BEND LINES DO NOT MAKE BEND LESS THAN 0 31 INCHES FROM THE CARBIDE WIRES DO NOT MAKE THE BEND TIGHTER THAN 90 DEGREES AND NOT LESS THAN A 0 50 INCH BEND RADIUS DISASSEMSLE AND PLACE CARBIDE-WIRE-BEARING-END IN A VISE OR METAL BENDING BRAKE OR JIG AND BEND TO REQUIRED ANGLE DO NOT USE A HAMMER TO SHARPEN THE BEND

4 PERFORM PRODEDURES A 5 THROUGH A 7 ABOVE

C THE FOLLOWING APPLIES TO STYLES 8 AND 9 ONLY

1. PERFORM PROCEDURE A 1 THROUGH A.9 ABOVE

2 EACH HASP BRACKET SHALL BE CONTINUOUSLY WELDED ALL AROUND,WHERE POSSIBLE

D THE FOLLOWING APPLIES TO STYLE 7 ONLY

1 MOUNT STAPLE BY WELDING OR USING SCREWS PROVIDED ENSURING AN ADEQUATE SERVICE LOOP FOR PROPER FUNCTIONING OF HASP

2 PADLOCKS USED WITH THE STYLE 7 HASP SHALL HAVE CHAIN,CLEVIS AND PLATE IN ACCORDANCE WITH THE PERTINENT PARAGRAPH OF MIL-P-43607.

FIGURE 2 Installation instructions - (continued)

STANDARDIZATION DOCUMENT IMPROVEMENT PROPOSAL

INSTRUCTIONS

1. The preparing activity must complete blocks 1, 2, 3, and 8. In block 1, both the document number and revision letter should be given
2. The submitter of this form must complete blocks 4, 5, 6, and 7.
3. The preparing activity must provide a reply within 30 days from receipt of the form.

NOTE: This form may not be used to request copies of documents, nor to request waivers, or clarification of requirements on current contracts. Comments submitted on this form do not constitute or imply authorization to waive any portion of the referenced document(s) or to amend contractual requirements.

I RECOMMEND A CHANGE:	1. DOCUMENT NUMBER MIL-H-43905C	2. DOCUMENT DATE (YYMMDD) 11 July 1990

3. DOCUMENT TITLE
MILITARY SPECIFICATION - HASPS, HIGH SECURITY PADLOCKS

4. NATURE OF CHANGE (Identify paragraph number and include proposed rewrite, if possible. Attach extra sheets as needed.)

5. REASON FOR RECOMMENDATION

6. SUBMITTER

a. NAME (Last, First, Middle Initial)	b. ORGANIZATION	
c. ADDRESS (Include Zip Code)	d. TELEPHONE (Include Area Code) (1) Commercial (2) AUTOVON (If applicable)	7. DATE SUBMITTED (YYMMDD)

8. PREPARING ACTIVITY

a. NAME R. J. MAYER, Project Manager Equipment Criteria Development Division Civil Engineer Support Office (CESO), Code 156	b. TELEPHONE (Include Area Code) (1) Commercial (805) 982-5801	(2) AUTOVON 551-5601 ext. 457
c. ADDRESS (Include Zip Code) Naval Construction Battalion Center CESO (Code 156) Port Hueneme, CA 93043-5000	IF YOU DO NOT RECEIVE A REPLY WITHIN 45 DAYS, CONTACT: Defense Quality and Standardization Office 5203 Leesburg Pike, Suite 1403, Falls Church, VA 22041-3466 Telephone (703) 756-2340 AUTOVON 289-2340	