| INCH-POUND |

MIL-P-43951A
18 February 1989
SUPERSEDING
MIL-P-43951
30 June 1976

MILITARY SPECIFICATION

PADLOCK, KEY OPERATED, MEDIUM SECURITY, REGULAR SHACKLE

This specification is approved for use by all Departments and Agencies of the Department of Defense.

1. SCOPE AND CLASSIFICATION

1.1 Scope. This specification covers one style key operated, medium security, regular shackle padlock that employs a dead bolt locking mechanism.

1.2 Classification. The padlock will be of the style as specified.

1.2.1 Style. The style of padlock will be of the following:

Style II - 0.500 inch (in) (12.7 millimeters (mm) shackle stock diameter.

1.2.1 Part or identifying number (PIN). A specification PIN has been established (see 6.2).

2. APPLICABLE DOCUMENTS

2.1 Government documents.

2.1.1 Specifications and standards. The following specifications and standards form a part of this specification to the extent specified herein. Unless otherwise specified, the issues of these documents shall be those listed in the issue of the Department of Defense Index of Specifications and Standards (DODISS) and supplement thereto, cited in the solicitation (see 6.2).

Beneficial comments (recommendations, additions, deletions) and any pertinent data which may be of use in improving this document should be addressed to: Commanding Officer (Code 156), Naval Construction Battalion Center, Port Hueneme, CA 93043-5000, by using the self-addressed Standardization Document Improvement Proposal (DD Form 1426) appearing at the end of this document or by letter.

AMSC N/A FSC 5340

DISTRIBUTION STATEMENT A. Approved for public release; distribution is unlimited.

SPECIFICATIONS

FEDERAL

RR-C-271 - Chains and Attachments, Welded, Weldless.
QQ-N-290 - Nickel Plating (Electrodeposited).
QQ-C-320 - Chromium Plating (Electrodeposited).
PPP-T-97 - Tape, Packaging/Industrial, Filament Reinforced.
PPP-B-566 - Boxes, Folding Paperboard.
PPP-B-601 - Boxes, Wood, Cleated-Plywood.
PPP-B-621 - Boxes, Wood, Nailed and Lock-Corner.
PPP-B-636 - Boxes, Shipping, Fiberboard.

MILITARY

MIL-P-116 - Preservation, Methods of.
MIL-M-7866 - Molybdenum Disulfide, Technical, Lubrication Grade.
MIL-G-21164 - Grease, Molybdenum Disulfide, for Low and High Temperatures.
MIL-H-29181 - Hasp, High Security, Shrouded, for High and Medium Security Padlock, General Specification for.
MIL-H-43905 - Hasp, High Security Padlocks.

STANDARDS

MILITARY

MIL-STD-105 - Sampling Procedures and Tables for Inspection by Attributes.
MIL-STD-129 - Marking for Shipment and Storage.
MIL-STD-889 - Dissimilar Metals.

(Unless otherwise indicated, copies of federal and military specifications, standards, and handbooks are available from the Naval Publications and Forms Center, (ATTN: NPODS), 5801 Tabor Avenue, Philadelphia, PA 19120-5099).

2.1.2 Other Government documents, drawings, and publications. The following other Government documents, drawings, and publications form a part of this specification to the extent specified herein. Unless otherwise specified, the issues are those cited in the solicitation.

DRAWINGS

NAVAL SEA SYSTEMS COMMAND (NAVSEA)

NAVSEA 53711-5532334 - High Security Hasp, MK 2 MOD 9 Hinged or Sliding Horizontal Door, R. H., Style I.
NAVSEA 53711-5532335 - High Security Hasp, MK 2 MOD 9 Hinged or Sliding Horizontal Door, L. H., Style II.
NAVSEA 53711-5532337 - High Security Hasp, Shipboard, 1300 MOD 1.

NAVAL AMMUNITION PRODUCTION ENGINEERING CENTER (NAPEC)

NAPEC 0955 - High Security Hasp, Hinged R. H., MK 2 MOD 7.
NAPEC 0956 - High Security Hasp, Hinged or Sliding Horizontal Door, R. H., MK 2 MOD 8.
NAPEC 0957 - High Security Hasp, Hinged or Sliding Horizontal Door R. H., MK 2 MOD 8.
NAPEC 0958 - High Security Hasp, Hinged or Sliding Horizontal Door, L. H., MK 2 MOD 8.

(Copies of specifications, standards, handbooks, drawings, publications, and other Government documents required by contractors in connection with specific acquisition functions should be obtained from the contracting activity or as directed by the contracting activity.)

2.2 Non-Government publications. The following document(s) form a part of this specification to the extent specified herein. Unless otherwise specified, the issues of the documents which are DOD adopted are those listed in the issue of the DODISS cited in the solicitation. Unless otherwise specified, the issues of documents not listed in the DODISS are the issues of the documents which is current on the date of the solicitation (see 6.2).

AMERICAN SOCIETY FOR TESTING AND MATERIALS (ASTM)

ASTM B 117 - Salt Spray (Fog) Testing.
ASTM E 18 - Rockwell Hardness and Rockwell Superficial Hardness of Metallic Materials.
ASTM F 883 - Standard Performance Specification for Padlocks.
ASTM D 3951 - Commercial Packaging.

(Application for copies should be addressed to the American Society for Testing and Materials, 1916 Race Street, Philadelphia, PA 19103.)

2.3 Order of precedence. In the event of a conflict between the text of this specification and the references cited herein (except for associated detail specifications, specification sheets or MS standards), the text of this specification takes precedence. Nothing in this specification, however, supersedes applicable laws and regulations unless a specific exemption has been obtained.

3. REQUIREMENTS

3.1 Description. The regular shackle, medium security, key operated padlock, hereinafter referred to as "padlock," or "unit," has a body (or case) that has no projections which will cover or shroud the shackle. The size, strength, and quality of padlock provides a medium degree of resistance to unauthorized access.

3.2 Padlock samples. Padlocks submitted for inspection shall as a minimum conform to requirements of ASTM F 883 type PO-1, grade 6.

3.2.1 Bid samples. Unless otherwise specified (see 6.2), each bidder shall furnish, with the bid, 17 samples of the padlock with key sets they propose to furnish under the contract for inspection as specified in 4.3.1, and in addition, unless otherwise specified (see 6.2), 10 milled, uncut key-blanks shall be furnished for testing. One intact unit of the selected product will be retained by the testing agency and one intact unit will be returned to the selected bidder to be used as a guide in manufacturing the first article and production quantity. All samples submitted will be competitively tested and the manufacturers proprietary information protected. Test results and tested samples become property of the Government to protect testing methods and techniques, and manufacturers proprietary information (see 3.2.2 and 6.3). Test units will not be returned to the bidder or the supplier.

3.2.2 First article. Unless otherwise specified (see 6.2), ten padlocks and key sets shall be furnished for first article testing and approval (see 4.4 and 6.4). If the requirement for bid samples is waived, 17 padlocks and key sets shall be furnished for the first article testing and approval. In addition, unless otherwise specified (see 6.2), ten milled, uncut key blanks shall be furnished for testing. The first article units shall be selected at random from the first 100 standard production units or from the contractor's current inventory. If approved, one intact unit of the first article submission will be forwarded to the cognizant quality assurance representative and one intact unit shall be returned to the contractor to serve as the manufacturing standard. No deviation from the manufacturing standard shall be acceptable without formal written approval of the contracting officer in advance. Certification of compliance with this paragraph shall be provided to the inspector with each production quantity lot presented for inspection and acceptance. Tested units become the property of the Government to protect testing methods and manufacturers proprietary information. Test units will not be returned to the bidder or the supplier.

3.3 Materials. Materials used shall be free from defects which would adversely affect the performance or maintainability of individual components or of the overall assembly. Materials not specified herein shall be of the same quality used for the intended purpose in commercial practice. Unless otherwise specified herein, all equipment, material, and articles incorporated in the work covered by this specification are to be new and fabricated using materials produced from recovered materials to the maximum extent possible without jeopardizing the intended use. The term "recovered materials" means materials which have been collected or recovered from scrap material and reprocessed to become a source of raw materials, as opposed to virgin raw materials. Unless otherwise specified, none of the above shall be interpreted to mean that the use of used or rebuilt products are allowed under this specification.

3.3.1 Material deterioration and control. The padlock shall be fabricated from compatible materials, inherently corrosion and deterioration resistant, or treated to provide protection against the various forms of corrosion and

deterioration that may be encountered in any of the applicable storage and operating environments to which the padlock may be exposed.

3.3.1.1 Dissimilar metals. Dissimilar metals, as defined in MIL-STD-889, shall be coated, plated, or electrically insulated from one another to minimize or prevent galvanic corrosion.

3.3.1.2 Identification of materials and finishes. The contractor shall identify the specified material, material finish, or treatment used for, on, or between components and sub-components, and shall make such information available, upon request, to the contracting officer or designated representative.

3.4 Design. The major components of the padlock shall be a body, a shackle, and a locking mechanism. The shape of the padlock shall be at the option of the contractor, provided the assembled padlock conforms to all requirements specified herein. The padlock shall have a 0.50 inch (12.7 mm) diameter shackle. Each padlock shall be keyed different. The padlock shall have a shackle opening that will admit the mating members of hasps conforming to MIL-H-43905, MIL-H-29181, NAVSEA drawings 53711-5532334, and 53711-5532335 and NAPEC drawings 0955 through 0958 and adaptable to NAPEC 1300 hasps conforming to NAVSEA drawings 53711-5532337 when the shackle is changed as specified in the drawing (see 3.6.3). The assembled padlock shall have a volume that is not more than 15 cubic inch (245.81 cubic centimeters (cm^3), excluding the chain, clevis, and plate, and shall weight not more than 3.5 pounds (lbs) (1.588 kilograms [kg]).

3.4.1 Key and keyways. The key and keyways design shall be configured exclusively for military use, and shall not be available commercially. The key and keyways design, and the reverse image of the design, shall be set aside for DoD use only. There shall be not less than 100,000 different key changes for padlocks supplied under any one contract.

3.4.2 Chain, clevis, and plate. A chain, attachment plate, and clevis shall be furnished with each padlock. The chain shall be securely attached to the padlock case by means of a clevis and rivet or other secure fastening device, in such a manner that it will not interfere with the operation of the locking mechanism. The chain length shall be 9 inches (229 mm) plus or minus one link. Chain, clevis, fastener, screws, and plate shall be fabricated from corrosion resisting material. The chain shall be attached to the lock in such a manner that the key opening and drain holes shall perform their proper function. The chain shall conform to RR-C-271, type I, grade C, class 5, style I.

3.5 General requirement. The padlock shall meet general requirements as specified in 3.5.1 through 3.5.3.

3.5.1 Surreptitious neutralization resistance. The padlock shall resist surreptitious neutralization for not less than 15 minutes before and after the wear resistance cycling (see 3.5.2.1).

3.5.2 Effectiveness of design and materials durability. The design features and the materials used shall be such that the padlock shall perform as specified in 3.5.2.1 through 3.5.2.9.

3.5.2.1 Wear resistance. The padlock shall withstand 10,000 complete locking and unlocking cycles, without failure to fully lock and fully unlock during any cycle, and without loss of resistance to surreptitious neutralization.

3.5.2.2 Drop resistance, ambient temperature. The locked padlock shall withstand not less than 10 consecutive drops on different sides, from a height of not less than 6 feet (ft) (1.8 meters [m]), onto a hard, unyeilding surface without exhibiting evidence of fracture of any component or malfunction.

3.5.2.3 Drop resistance, high temperature. The locked padlock shall not be affected from being dropped from a height of not less than 3 ft (0.9 m) onto a hard, unyeilding surface. The padlock shall not open by means other than with the proper key. The padlock is to be dropped while it is still hot from having been heated to a temperature of not less that 1200 degrees Fahrenheit (°F) [649 Centigrade (°C)] and not more than 1300°F (722°C).

3.5.2.4 Shackle pull-out resistance. The padlock shall resist a tensile pull of not less than 12,000 lbs (53.3 kilonewtons [kN]) without pulling the shackle out of the padlock, the padlock breaking or opening without the use of the proper key.

3.5.2.5 Shock resistance, low temperature. The padlock shall resist opening by means other than by the proper key after being cold soaked at -100°F (-73°C) and being struck with a 3 lb (1.36 kilograms [kg]) double faced engineers hammer. This performance is required while the padlock is secured in the locked mode on a MIL-H-43905 hasp in a vertical wall mount position.

3.5.2.6 Heat resistance. The padlock shall withstand a direct pull of not less than 50 lbs (222 newtons [N]) on the shackle, after exposure to a temperature between 1875°F (1023°C) and 1925°F (1051°C), without opening or separation of the shackle.

3.5.2.7 Forced entry resistance. The padlock shall withstand a concentrated forced entry attack using the tooling constraints listed in 4.6.3.7 and an accumulated work time of four minutes minimum for any one performance item. Performance items 3.5.2.7.1 through 3.5.2.7.5 shall be evaluated by using the forced entry resistance tests of section 4.

3.5.2.7.1 Cylinder plug pulling resistance. The padlock shall resist a pulling force of 3600 lbs (16 kilonewton [kN]) applied axially between the cylinder plug and padlock body without separation of the plug or cylinder assembly from the padlock body. Damage to the cylinder assembly that permits opening of the padlock with a screwdriver shall constitute failure of this test.

3.5.2.7.2 Cylinder plug torque test. The padlock shall resist a torque load of 415 inch lbs (46.89 newton meter [Nm]) applied to the keyway of the cylinder plug with a bladed tool without unlocking and release of the shackle.

3.5.2.7.3 Shackle cutting resistance. The padlock shackle shall resist a compression cutting force of 13,350 lbs (59 kN) exerted by steel cutting tool such as a heavy duty bolt cutter or chain cutter with a center cut jaw design that can produce the required compression force.

3.5.2.8 Low temperature operation. The padlock shall operate at temperatures to -60°F (-51°C) when the appropriate operating key is inserted and turned in the padlock. The cylinder shall turn without sticking or excessive force or pressure and release the shackle both when initially tested and after 10,000 cycles. The control key shall also perform its design function without sticking or excessive pressure or force before and after the 10,000 cycle test. Time limit is as required to accomplish the temperature level and operation check.

3.5.2.9 Salt spray (fog) resistance. The padlock and its keys shall withstand exposure to salt spray (fog) for not less than 96 hours without evidence of deterioration of any component, except for minor corrosion that does not adversely affect the performance of the padlock and keys.

3.5.3 Key integrity. The keys furnished with any one padlock shall not be capable of locking, unlocking, or removing the cylinder, of any other padlock. Each key shall resist manipulation for a minimum of one minute.

3.6 Detailed requirements. The padlock, components, and keys shall be as specified in 3.6.1 through 3.6.4.1.

3.6.1 Body. The complete assembled body of the padlock shall have no openings other than shackle opening and keyway, except that drainage holes and plugged holes are permissible. Drainage holes, if incorporated, shall not be larger than 0.093 inches (2.40 mm) diameter. The body shall incorporate a means to prevent access to the locking mechanism, except by use of a control key to disassemble the padlock.

3.6.2 Shackle. The shackle shall be 0.50 inch (12.7 mm), +0.010, -0.020 inch (+0.254,-0.508 mm) diameter. The shackle shall remain securely attached when the padlock is in the unlocked, fully opened position and shall be capable of being separated from the padlock only when the padlock is disassembled. Space between the shackle and the case shall be 0.75 inch ±0.03 inch (19.05 mm ± 0.75 mm) except when used with shackle pins for the 1300 hasp.The space between the shackle legs shall admit, without force, the mated hasp members, and 1300 shackle pins, as specified in 3.4.

3.6.3 Locking mechanism. The shackle shall be held in the locked position at both heel and toe by a dead-bolt type lock mechanism. The padlock shall open when the key is turned in the clockwise direction and lock when the key

is turned in the counterclockwise direction. The operating key shall be retained in the keyway of the cylinder and shall not be removable when the padlock is in the open position or when the 1300 hasp shackle pin is withdrawn from the padlock.

3.6.3.1 Cylinder assembly. The cylinder assembly of the locking mechanism shall have a plug with only three distinct, easily recognizable positions. Two positions of the plug shall be operating positions of locked and unlocked. The third position shall be the control position which allows disassembly of the lock.

3.6.3.1.1 Cylinder assembly removal. The cylinder assembly shall be securely retained within the padlock body when the cylinder plug is in either the locked or unlocked position. The cylinder assembly shall be removable from the padlock body only after the cylinder plug is rotated to the control position by use of a control key. When removed from the padlock body, the cylinder assembly shall remain as one assembly.

3.6.3.1.2 Cylinder assembly interchangeability. A cylinder assembly from any one padlock delivered under a contract shall be interchangeable with a cylinder assembly from any other padlock delivered under the same contract.

3.6.3.2 Keys. Each padlock shall be furnished with 3 keys. Terms for parts of keys used herein are as follows and on figure 1:

Bow	- Part grabbed by your hand to turn the key.
Bit	- Part that is inserted into the keyway and depresses the tumbler pins in the plug.
Milled Ward-Cuts	- Grooves in the flat side of the bit parallel to the bit axis.
Bit Cuts	- Cutouts made on the edge of the blade (at an angle to the long axis of the blade) to activate the tumblers.
Blade	- Part that enters the keyway in the plug.

3.6.3.2.1 Key material hardness. The key material shall have a hardness that is not less than Rockwell hardness number of 75 on Rockwell B scale (75 HRB) in accordance with ASTM E 18.

3.6.3.2.2 Key deformation resistance. The key shall resist a torque of 8 lbf·in (0.9 N·m) without permanent set deformation of more than 0.125 inch (3.2 mm), when measured at the end of an 8 inches (203 mm) lever. The lever to be attached to the bow of the key blank at an angle perpendicular to the long axis of the blade of the key blank. The maximum cross section of the material being torqued shall be no greater than the cross section at the deepest bit cut employed.

3.6.3.2.3 Key shapes. The bows of the operating keys shall be identical. The bows of control keys shall be of significantly different shapes than the bows of the operating keys.

3.6.3.2.4 Key bit cut limits. The cut depth of all keys shall be no more than 55 percent (%) of the full depth, or cross section, of the key bit. The depth of the last two cuts (nearest the bow) on any key shall be no more than 40% of the key bit depth.

3.6.3.2.5 Key marking. In addition to the individual key markings specified in 3.6.3.2.7.1, all keys shall be stamped with: "US MILITARY PROPERTY - DO NOT DUP." The control key shall also be stamped with the legend: "CONTROL KEY." The Operating Keys shall be stamped with the legend "OPERATING KEY."

3.6.3.2.6 Operating keys. The operating keys shall lock and unlock the padlock. The operating keys shall not be capable of rotating the cylinder plug to the control position. When the cylinder plug is in the unlocked position, the operating key shall be prevented from being removed from the cylinder plug.

3.6.3.2.7 Control key. The control key shall lock and unlock the padlock, and also rotate the cylinder plug to the control position to enable removal of the cylinder as specified in 3.6.3.1.1.

3.6.3.2.7.1 Key serial numbers. The three keys for each padlock shall be identified by the same serial number stamped on each key. The characters shall be not less than 0.094 inch (2.381 mm) in height. The serial number shall not in any way disclose the key bitting either directly or by commercially available or published coding.

3.6.4 Appurtenances, slides, or covers. Appurtenances, slides, or covers that may be incorporated in the padlock shall be secure when the locking mechanism is in the locked or unlocked positions. The removal of any appurtenance, slide, or cover shall not be possible, except with the control key in the control position or by disassembly of the padlock.

3.6.4.1 Keyway cover. Any keyway cover or plate shall remain aligned with the keyway. There shall be no keyway cover or obstruction which requires any special action or separate maneuver by the padlock user before a key can be inserted in the keyway.

3.7 Lubrication. The padlock shall be lubricated with molybdenum disulfide powder conforming to MIL-M-7866 applied sparingly to the internal parts of the cylinder. Other moving parts may be lubricated by applying a thin film of lubricant conforming to MIL-G-21164.

3.8 Color and finish. The color of the padlock shall be the natural color of the finish. All surfaces shall have a uniform finish of sufficient smoothness to accept the required marking. When corrosion protection is required for the padlock body or shackle, the finish shall be limited to chromium plating in accordance with QQ-C-320, class 1, type II, or nickel plating in accordance with QQ-N-290, class 2 except that the finish shall be dull or satin.

3.9 Identification marking. The body of the padlock shall be marked with the letters "US", the manufacturer's name, trademark or CAGE number, some traceable model identification, and the year of manufacture. The markings may be stamped, rolled, cast, or applied in any other manner that will assure legibility after the padlock has been exposed to the testing specified herein.

3.9.1 Prohibited marking. There shall be no markings on the padlock exterior which would aid in the unauthorized opening of the padlock.

3.10 Instructions. Operating and maintenance instructions shall be furnished with each padlock that are normally furnished with such equipment for the commercial market.

3.11 Workmanship. The padlock and keys shall be free from sharp edges, burrs, and slivers that affect serviceability or appearance.

4. QUALITY ASSURANCE PROVISIONS

4.1 Responsibility for inspection. Unless otherwise specified in the contract or purchase order, the contractor is responsible for the performance of all inspection requirements (examinations and tests) as specified herein. Except as otherwise specified in the contract or purchase order, the contractor may use his own or any other facilities suitable for the performance of the inspection requirements specified herein, unless disapproved by the Government. The Government reserves the right to perform any of the inspections set forth in the specification where such inspections are deemed necessary to ensure supplies and services conform to prescribed requirements.

4.1.1 Responsibility for compliance. All items must meet all requirements of sections 3 and 5. The inspection set forth in this specification shall become a part of the contractor's overall inspection system or quality program. The absence of any inspection requirements in the specification shall not relieve the contractor of the responsibility of ensuring that all products or supplies submitted to the Government for acceptance comply with all requirements of the contract. Sampling inspection, as part of manufacturing operations, is an acceptable practice to ascertain conformance to requirements, however, this does not authorize submission of known defective material, either indicated or actual, nor does it commit the Government to accept defective material.

4.1.2 Component and material inspection. Components and materials shall be inspected in accordance with all the requirements specified herein and in applicable referenced documents. A unit of product shall be one complete padlock with accessories.

4.2 Classification of inspections. The inspection requirements specified herein are classified as follows:

a. Bid sample inspection (see 4.3 and 6.2.1).
b. First article inspection (see 4.4 and 6.2.1).
c. Quality conformance inspection (see 4.5).
d. Inspection of packaging (see 4.7).

4.3 Bid sample inspection. Bid sample inspections shall be conducted by agencies as specified in the contract. Samples selection shall be at the manufacturer's option as specified in 3.2.1 and 4.3.1.

4.3.1 Bid sample examination. Bid sample padlocks shall be examined for defects listed in table I. The presence of any visual defect, any dimensions not within specified requirements, or failure to pass any test shall be cause for rejection of the bid. Bid sample padlocks, after inspection, shall be handled as specified in 3.2.1 unless otherwise specified in the contract. Bid samples shall be preproduction or standard production units from the contractor's current inventory.

4.3.2 Bid sample tests. Bid sample padlocks shall be tested in accordance with 4.6.2.2 and table II.

4.4 First article inspection.

4.4.1 Sampling for first article. When a first article is required for locks that were inspected as bid samples (see 3.2.2, and 6.2.3.1).

4.4.2 First article examination. The first article shall be examined as specified in 4.6.1 (see 6.2.3.1).

4.4.3 First article tests. The first article shall be subjected to the tests as specified in 4.6.2.2, table II (see 6.2.3.1).

4.5 Quality conformance inspection.

4.5.1 Sampling.

4.5.1.1 Sampling for examination. Sampling for examination shall be in accordance with MIL-STD-105 (see 6.2.3.2).

4.5.1.2 Sampling for tests. Padlocks shall be randomly selected from the lot submitted for acceptance in accordance with MIL-STD-105 (see 6.2.3.3).

4.5.2 Examination. Samples selected in accordance with 4.5.1.1 shall be examined for defects as specified in 4.6.1.

4.5.3 Tests. The padlocks selected in accordance with 4.5.1.2 shall be subjected to the tests specified in column 3 of table II. Tests shall be performed in the order shown.

4.6 Inspection procedure. Prior to examination and tests, padlocks shall be lubricated and, unless otherwise specified herein, all tests shall be conducted at the ambient air temperature at the test site.

4.6.1 Classification of defects. The padlocks with keys, selected as specified, shall be examined for the defects indicated on table I.

TABLE I. Classification of defects.

Classification	Defects	Requirement paragraph
Critical:		
01	Design of padlock does not permit mating to specified hasps, or exceeds volume or weight limits specified.	3.4
02	Key and keyway design not set aside for DoD use only, or does not have at least 100,000 different key changes.	3.4.1
03	Shackle capable of being separated from padlock by means other than as specified.	3.6.2
04	Any prohibited marking on padlock exterior.	3.9.1
Major:		
101	Material not as specified.	3.3
102	Material deterioration control not as specified.	3.3.1
103	Dissimilar metals not plated or insulated to minimize or prevent galvanic corrosion.	3.3.1.1
104	Used, rebuilt, or remanufactured components, pieces, or parts incorporated in padlock.	3.3.2
105	Body of padlock has openings other than as specified.	3.6.1
106	Shackle not of size specified.	3.6.2
107	Locking mechanism not as specified.	3.6.3
108	Cylinder assembly and removal not as specified.	3.6.3.1 & 3.6.3.1.1
109	Keys not furnished or not furnished as to type and quantities specified.	3.6.3.2
110	Key bow shapes not different for operating and control keys.	3.6.3.2.3

TABLE I. Classification of defects. cont'd

Classification	Defects	Requirement paragraph
112	Key cut depths exceed depths specified.	3.6.3.2.4
113	Keys without the required marking.	3.6.3.2.5 & 3.6.3.2.7.1
114	Padlock not lubricated as specified.	3.7
115	Workmanship not as specified.	3.11
Minor:		
201	Information to identify material and finish or treatment not available.	3.3.1.2
202	Chain, clevis, rivet, and plate not attached securely, malformed, bent, any part missing.	3.4.2
203	Color and finish of padlock not as specified.	3.8
204	Identification markings omitted from body of padlock.	3.9
205	Instruction not furnished with padlock.	3.10

4.6.2 Tests.

4.6.2.1 Test conditions. Except as otherwise specified herein, tests shall be conducted at prevailing ambient temperatures and humidity in the test facility.

WARNING

These tests are hazardous due to the tools used and the powerful oxidizing characteristics of the chemicals involved. Proper personnel protection (clothing, eye protection, gloves, etc.), containers and equipment are necessary.

The United States Government neither assumes nor accepts responsibility for any injury or damage to non-Government personnel or property that may occur during or as a result of any test required by this specification.

4.6.2.2 Test schedule. The test schedule shall be as indicated by "X" in the appropriate column in table II, and in the order shown.

Table II. Test schedule.

Bid Samples	First Article	Quality Conformance	Test	Test Paragraph	Req-ment Paragraph
1	2	3	4	5	6
			Functional test		
X	X	X	Operating key function	4.6.3.14	3.6.3.2.6 & 3.6.4.1
X	X	X	Control key function.	4.6.3.15	3.6.3.2.7 3.6.3.1.1
X	X	X	Cylinder interchange-ability.	4.6.3.16	3.6.3.1.2
			Key tests		
X	X		Key hardness.	4.6.3.12	3.6.3.2.1
X	X		Key deformation resistance.	4.6.3.13	3.6.3.2.2
			Environmental tests		
X	X		Salt spray (fog) resistance.	4.6.3.11	3.5.2.9
			Performance tests		
X	X	X	Surreptitious neutrali-zation resistance.	4.6.3.1	3.5.1 & 3.6.4
X	X		Wear resistance.	4.6.3.2	3.5.2.1
X	X		Drop resistance, ambient temperature.	4.6.3.3	3.5.2.2
X	X		Drop resistance, after heating.	4.6.3.4 4.6.3.7	3.5.2.3
X	X	X	Shackle pullout	4.6.3.5	3.5.2.4
X	X		Low temperature shock resistance	4.6.3.6	3.5.2.5
X	X		Forced entry.	4.6.3.7-4.6.3.7.5	3.5.2.7
X	X		Heat resistance.	4.6.3.8	3.5.2.6
X	X		Low temperature operation.	4.6.3.9	3.5.2.8
X	X	X	Key integrity.	4.6.3.10	3.5.3

4.6.3 Test procedures.

4.6.3.1 Surreptitious neutralization test. Subject the locked padlock to surreptitious attempts to open the padlock, without the furnished keys, by the use of devices, equipment and methods such as picking, shimming, bypassing, impressioning, and other methods used by locksmiths to open padlocks without harm to the padlock or clearly visible evidence of attempts to open, for not less than 15 minutes (min). If the padlock is opened by any of the surreptitious techniques in less than 15 minutes, it shall constitute failure of this test. In addition, if any appurtenance, slide, or cover is rendered insecure, or is removed by surreptitious neutralization, it shall constitute failure of this test.

4.6.3.2 Wear resistance test. Use the control key to remove and replace the cylinder assembly in the padlock. Place the cylinder plug in the locked position (shackle, bar, or pin in closed position) and withdraw the control key. Use an operating key to subject the padlock to 10,000 complete, consecutive cycles of unlocking and locking. A single cycle shall include the following steps:

a. Insert operating key into keyway and use it to rotate cylinder plug to unlocked position.
b. Pull shackle fully open and reclose shackle.
c. Rotate cylinder plug with operating key to locked position and pull on shackle to assure it is locked.
d. Remove the operating key from the keyway.

After the 10,000 cycles are completed, conduct the surreptitious neutralization test specified in 4.6.3.1 on the same padlock used in the wear test. Then, use the control key to remove and replace the cylinder assembly again. If the padlock malfunctions during the 10,000 cycles, fails the surreptitious neutralization test after the 10,000 cycles, or does not permit removal and replacement of the cylinder by use of the control key, any one of these shall constitute failure of this test.

4.6.3.3 Drop test, ambient temperature. The surface on which the padlock shall be dropped, shall be 0.5-inch (12.7 mm) thick steel plate fastened to a portland cement concrete base. The padlock shall be locked. Drop the padlock not less than 10 times from a height of 6 feet (1.8 m) onto the steel plate. The drops shall be free drops, but manipulated so that the padlock strikes the steel surface at least once on each of its six major surfaces (i.e., top, bottom, front, back, and both sides). After the 10 drops, unlock the padlock with the control key and then remove the cylinder. Examine the padlock. Fracture of any component or malfunction of the padlock shall constitute failure of this test.

4.6.3.4 Drop test, high temperature. Support the locked padlock in a hanging position where it can be easily removed without opening the shackle. Insert an iron-constantan (Type-J) or a chromel-alumel (Type-K) thermocouple

into the keyway. Heat the body of the padlock to a temperature of not less than 1200°F (649°C) and not more than 1300°F(704°C) with a suitable heating torch. Do not concentrate the heating flame on one location, but use a brushing motion of the flame. When the thermocouple temperature of 1200°F (649°C) is indicated, maintain the temperature for not less than 3 minutes. Then remove the flame and lift the padlock from its support with tongs, within 2 seconds (sec) of removing the flame, drop the padlock onto a steel plate, as specified in 4.6.3.3, from a height of 3 ft (0.9 m). Immediately pick the padlock up with the tongs and drop it four more times from the same height onto the same surface. If the padlock shackle opens after any drop, or opens by means other than by using the proper key, this constitutes failure of the test. Perform tests of 4.6.3.7 to determine malfunction or damage from dropping.

4.6.3.5 Shackle pull-out test. Clamp the locked padlock in a device that will bear against the shroud of the body, but not interfere with the shackle. Apply a tension load of 12,000 (53 kN) at a gradually increasing load (no sudden impact) on the vertical center line of the padlock so that a direct and equal tension is applied to each leg of the shackle. Shackle pull out of the padlock or breaking shall constitute failure of this test.

4.6.3.6 Low temperature shock test. Install and lock the padlock on a MIL-H-43905 hasp or fixture of suitable low temperature resistant metal that simulates the support and access of this hasp. Cold soak the padlock until the temperature is stabilized at not higher than -100°F (-73°C) and attempt to break the padlock by striking the padlock at least six times with a 3 lb (1.36 kg) double faced engineers hammer. Swinging of the hammer shall be performed while grasping the end of the handle with both hands. Striking of the padlock shall be done while the padlock is within 5°F (2.8°C) of -100°F (-73°C). If the padlock opens, shatters, or fails the tests of 4.6.3.1 and 4.6.3.5 after being subjected to striking for 5 minutes or less lapsed time at the low temperature, the padlock has failed the test. The tests of 4.6.3.1 and 4.6.3.5 shall be conducted with the padlock at room temperature (approximately 70°F [39°C]).

4.6.3.7 Forced entry test. A suitable hasp selected from MIL-H-43905 shall be secured to a solid upright post or wall supported heavy plate in a manner capable of surviving the forces of this test. The padlock to be tested shall be locked onto the hasp. Any combination of tools similar, but not limited to the following types, shall be used in an attempt to defeat the padlock. Total weight shall not exceed 20 lbs (9.07 kg)..

a. Saws and drills with assorted blades and bits - manual or battery powered.
b. Heating equipment - limited to single tank type - not to exceed 1200°F (649°C).
c. Hammer - not to exceed 3 lbs (1.36 kg) weight with 18 inches (0.46 m) long handle.

d. Chisels, punches, jimmies, wrecking bars, and torque levers - limited to 18 inches (0.45 m) in collapsed length.
e. Common hand tools.
f. Chemicals - capable of softening or dissolving critical components, explosives excluded.
g Bolt cutters shall be hand powered and shall not exceed 24 inches in length.

Defeat of the padlock in less than four minutes accumulated work time (excluding preparation, rest, and safety precaution periods) shall constitute failure of this test.

4.6.3.7.1 Cylinder plug pulling resistance. Support the locked padlock in a rigid clamp. Drill the keyway with No. 20 drill bit and insert a type AB No. 12 screw into the hole to a depth of not less than 0.75 inch (19.05 mm). Apply a 3600 lb (16 kN) force axially between the padlock body and the installed screw. If the cylinder plug or cylinder assembly completely separates from the padlock body, or if the padlock can be opened by manipulating the cylinder assembly or cylinder plug with a screwdriver after removal of the installed screw and removal from the clamp, it shall constitute failure of this test.

4.6.3.7.2 Cylinder plug torque resistance. Support the locked padlock in a rigid clamp such as a vise. The clamping action shall not bind the cylinder assembly in the padlock body to the extent that the padlock cannot be unlocked and relocked with an operating key. Insert a blade type tool into the keyway so that a torque load can be applied to the cylinder assembly. Apply a torque load of not less than 415 inch lbs (46.89 Nm) to the bladed tool. If the cylinder plug can be turned from the locked to unlocked position so that the shackle is released to open, it shall constitute failure of this test.

4.6.3.7.3 Shackle cutting resistance. Use a shearing device with 11SI shock resisting S2 tool steel and the ability to exert a force 13,350 lbs (59 kN). Place the shackle of the padlock between the cutting blades as specified in ASTM F 883, and apply the load slowly until the maximum force has been applied. If the shackle is cut through, it shall constitute failure of this test.

WARNING

This test is hazardous due to the powerful oxidizing characteristics of the chemicals involved. Proper personnel protection (clothing, eye protection, gloves, etc.), and containers and equipment are necessary.

The United States Government neither assumes nor accepts responsibility for any injury or damage that may occur during or as a result of this test.

4.6.3.8 Heat resistance test. Suspend a locked padlock by the shackle in an unheated oven. Turn the oven on and bring the oven temperature up to not less than 1875°F (1023°C), but not more than 1925°F (1051°C) and hold the oven at that temperature for not less than 30 minutes. Turn the oven off and allow the padlock to cool to room temperature. After the cooling, restrain the shackle and apply a pull of not less than 50 lbs (23 kg) to the padlock body. If the shackle opens or separates from the padlock, it shall constitute failure of this test.

4.6.3.9 Low temperature operation test. Cold-soak the padlock at a temperature not higher (warmer) than -60°F (-51°C). While at the temperature, subject the padlock to the operational test specified in 4.6.3.14.

4.6.3.10 Key integrity test. The test padlock shall be a locked padlock. The keys from 10 other padlocks selected at random from all the padlocks in the sample shall be used to attempt to unlock the test padlock. A key from each of the 10 padlocks shall be fully inserted into the keyway. The key shall then be slowly withdrawn while applying a jiggling- twisting force in the direction that the lock normally opens. The padlock shall resist the withdrawing and jiggling-twisting force for a minimum of one minute with each key without opening. If the test padlock opens, it shall constitute failure of this test.

4.6.3.11 Salt spray (fog) resistance test. The padlock and keys, with keys not inserted in the cylinder plug, shall be subjected to a minimum of 96 hours (hrs) of salt spray (fog) in accordance with ASTM B 117. After 96 hours, rinse the padlock and keys in the water, and examine for evidence of deterioration of any component. Any evidence of deterioration, except for minor corrosion spots that obviously do not affect the performance of the padlock, shall constitute failure of this test.

4.6.3.12 Key hardness test. The key blank, made from the same material as operating and control keys, shall be tested for hardness in accordance with ASTM E 18. Key material which does not have hardness equal to 75 HRB, or better, shall constitute failure of this test.

4.6.3.13 Key deformation resistance test. Cut a key blank in the first position next to the key bow to the maximum depth of the deepest bit cut employed in the bitting design. Clamp the key in a vise and attach an 8-inch (203 mm) lever to the key blank bow in such a manner that it will not separate from the bow under the torque load to be applied in this test procedure. Mark the position of the end of the lever opposite the bow on a fixed, immovable surface. Apply a torque force of not less than 8 lbf·inch (0.9 Nm) to key-blank bow for not less than 1 minute. Release the torque load and mark the position of the end of the lever opposite the bow. A mark in the second position, after torque unloading of the key blank bow, that is more than 0.125 inches (3.18 mm) from the original mark, shall constitute failure of this test.

4.6.3.14 Operating key function test. Operate a padlock with its operating key through 10 cycles of the steps specified in 4.6.3.2. The cyclic procedure shall be modified so that each time the padlock is unlocked, an attempt to withdraw the key from the padlock and to rotate the cylinder plug to the control position, shall be effected. Failure of the padlock to unlock, release of the operating key when the padlock is open, rotation of the cylinder plug to the control position, or failure of the padlock to lock shall constitute failure of this test. If the keyway cover or plate does not remain aligned with the keyway or obstructs the insertion of the operating key into the keyway, it shall also constitute failure of this test. This test shall be performed before and after 4.6.3.9.

4.6.3.15 Control key function test. Use the control key to turn the cylinder plug to the unlocked position and then to the control position. If the control key does not turn the the cylinder plug to both unlock and control positions, or cannot be used to remove and reinsert the cylinder assembly, it shall constitute failure of this test.

4.6.3.16 Cylinder interchangeability test. Remove the cylinder assembly from one padlock. Use the control keys of other padlocks from the same lot sample to remove their cylinder assemblies and to insert them into the padlock from which the cylinder has been removed. Then operate the padlock through not less than 5 cycles of the steps specified in 4.6.3.2, using the operating key which matches that of the cylinder. If the padlock fails to lock and unlock, using each of the replacement cylinder assemblies and their associated control keys, it shall constitute failure of this test.

4.7 Inspection of packaging.

4.7.1 Quality conformance inspection of pack.

4.7.1.1 Unit of product. For the purpose of inspection, a completed pack prepared for shipment shall be considered a unit product.

4.7.1.2 Sampling. Sampling for examination of the pack shall be in accordance with MIL-STD-105, level S-3.

4.7.1.3 Examination. Samples selected in accordance with 4.7.1.2 shall be examined for defects in accordance with table III. AQL shall be 2.5 percent defective except as noted (see 1/ of table III).

TABLE III. Defects in packaging.

Class	Defect	Level A	Level C
Major:			
119	Advertising and registration forms included in the package.	5.1.1	5.1.1
120	Envelope/bag for keys not printed as specified.	5.1.2.1	5.1.2.1
121	Matching keys and instruction sheets not in unit container with padlock as specified.	5.1.2.1	5.1.3.1
122	Unit container not sealed with reinforced tape as specified.	5.1.2.1	5.1.3.1
123	Sealed bag enclosing the unit container for level A preservation not style 2 (transparent) as specified.	5.1.2.1	
124	Improper quantity of padlocks placed in intermediate container.	5.1.2.2	5.1.3.2
125	Intermediate container not as specified	5.1.2.2	5.1.3.2
126	Closure of intermediate container not as specified.	5.1.2.2	5.1.3.2
127	Shipping container not as specified.	5.2.1	5.2.2
128	Shipping weights exceed specified limitations.	5.2.1	5.2.2
129	Marking not in accordance with MIL-STD-129.	5.3 5.3	5.3 5.3
130	Marking not in accordance with the contract or order.	5.3	5.3
Critical:			
131 1/	Item description (name/nomenclature), marked on unit container.	5.3	5.3
132 1/	Unit containers not marked or labeled with special instructions as specified.	5.3.1	5.3.1
133 1/	Unit containers not sealed as specified. They can be opened and resealed without evidence of tampering.	5.1.1	5.1.1

1/ The finding of one or more of defects 131, 132, or 133 shall be cause for rejecting the entire lot.

5. Packaging.

5.1 Preservation. Preservation shall be level A or C as specified (see 6.2).

5.1.1 General. Each padlock, including the specified keys and operating instructions, shall be preserved in an individual container that is sealed in such a manner that it cannot be opened and resealed without obvious indication of tampering. The keys required for one padlock shall be sealed in a paper, plastic envelope, or bag.

SPECIAL NOTE: No advertising or key registration forms shall be included in any bag, envelope, carton, or box.

5.1.2 Level A.

5.1.2.1 Unit container. Each padlock with matching keys (see 3.6.3.2) and operating instruction sheet (see 3.10), shall be preserved in accordance with submethod 1C 2 of MIL-P-116. The snug-fitting carton or box shall comply with PPP-B-566 or shall be the contractor's standard commercial snug fitting carton or box. Closure of the carton or box shall be with reinforced tape conforming to PPP-T-97. The sealed bag enclosing the carton or box shall be as specified for the submethod, except that the bag shall be style II.

5.1.2.2 Intermediate container. Ten padlocks, each preserved in the unit container specified in 5.1.2.1, shall be placed in a close-fitting, fiberboard box conforming to PPP-B-636, class weather-resistance. Box closure shall be in accordance with method V of the appendix thereto.

5.1.3 Level C.

5.1.3.1 Unit container. Each padlock, with matching keys (see 3.6.3.2) and operating instruction sheet (see 3.10), shall be preserved in a close-fitting fiberboard folding or set-up carton or box, in accordance with ASTM D 3951.

5.1.3.2 Intermediate container. Ten padlocks, each preserved in the unit container specified in 5.1.3.1, shall be placed in a close-fitting fiberboard box conforming to PPP-B-636, class domestic. Box closure shall be in accordance with method I of appendix thereto.

5.2 Packing. Packing shall be level A or level C as specified (see 6.2).

5.2.1 Level A. Padlocks, preserved as specified in 5.1, shall be packed in a close-fitting box, conforming to PPP-B-601, overseas type, style optional, or PPP-B-621, class 2, style optional. The gross weight of the box shall not exceed 200 lbs. Box closure and strapping shall be as specified in the applicable box specification or the appendix thereto, except that the strapping shall be flat and its finish shall be A.

5.2.2 Level C. Padlocks, preserved as specified in 5.1, shall be packed in a close-fitting box conforming to PPP-B-636, class domestic, either single wall or double wall. The quantity per box shall not exceed the applicable weight limitations specified therein and the box closure shall be method I of the appendix thereto.

5.3 Marking.

5.3.1 Standard marking. Marking shall be as specified in the contract or order and in accordance with MIL-STD-129 except that the item description (name/nomenclature) shall be omitted from the unit containers.

5.3.2 Special marking. Each unit container specified in 5.1, shall be marked with the following special instructions.

IMPORTANT

TO BE OPENED BY DESIGNATED
USER SECURITY PERSONNEL ONLY

The letters shall be 1/4-inch high minimum, color to be red or black, and shall be applied by marking the reinforced sealing tape (see 5.1.2.1 and 5.1.3.1) or by the application of pre-printed labels.

6. NOTES

(This section contains information of a general or explanatory nature that may be helpful, but is not mandatory.)

6.1 Intended use. This specification covers padlocks for general military use with hasps conforming to MIL-H-43905, MIL-H-29181, and drawings listed in 3.4 herein, where a medium degree of physical security is required. The degree of security is reduced when the padlock is used without a high security hasp.

6.2 Acquisition requirements. Acquisition documents should specify the following:

a. Title, number, and date of this specification. referenced (see 2.1.1 and 2.2).
b. PIN of unit required (see 1.2.1).
c. Issue of DODISS to be cited in the solicitation, and if required, the specific issue of individual documents
d. Bid samples required and instructions for disposition, if different (see 3.2.1).
e. Key requirements, if different (see 3.2.1 and 3.2.2).
f. When a first article is required for inspection and approval, and the number of units required and instructions for disposition, if different (see 3.2.2 and 4.4.1).
g. Level of preservation and packing required (see 5.1 and 5.2).

6.2.1 Part or identifing number (PIN).

PIN consists of the document identifier (M43951) and a PIN Code:

Style	PIN Code
Style II	-2

Example for a style II PIN:

M43951-2

6.2.2 Sampling procedures.

6.2.2.1 Sampling for first article. Ten sample units should be provided for inspection. When the requirement for bid samples is not required or waived, 17 units should be provided for inspection, plus 10 milled, uncut key-blanks. The first article unit(s) should be selected from the first 100 standard production units or from the contractor's current inventory or should be exactly the same as accepted bid samples set aside for production samples (see 6.3). Unless otherwise specified in the contract, first article units, after inspection, should be handled as specified in 3.2.2.

6.2.2.2 Sampling for examination. Recommended inspection level is S-3 and acceptable quality level (AQL) is zero percent defective for major and critical defects, and 4.0 for minor defects. A lot will be all units offered for delivery at one time not to exceed 5000 units per lot.

6.2.2.3 Sampling for tests. Recommended inspection level is S-2 and acceptable quality level is zero percent defective. A lot will be the same as for 6.2.3.2.

6.2.3 Commercial data requirements. When this specification is used in an acquisition and data are required to be delivered, the data requirements identified below should be developed as specified by an approved Data Item Description (DD Form 1664) and delivered in accordance with the Contract Data Requirements List (CDRL), incorporated into the contract. When the provisions of DOD FAR Supplement, Part 27, Sub-Part 27.410-6 (DD Form 1423) are invoked and the DD Form 1423 is not used, the data specified below should be delivered by the contractor in accordance with the contract or purchase order requirements. Deliverable data required by this specification are cited in the following paragraph:

Paragraph No.	Data requirement title	DID No.	Option
None	Engineering drawings	DI-E-5325	Maintenance drawings not required

6.4 Cross reference to revised document

MIL-P-43951	MIL-P-43951A
Style I	Deleted
Style II	Style II

6.5 Bid samples. When required, bid samples should be provided as specified in the contract. The contract should include specific instructions regarding arrangements for evaluation of the padlocks and whether testing will be held at the Naval Civil Engineering Laboratory (NCEL), Port Hueneme, California or at the Army Intelligence Material Activity (IMA), Fort Meade, Maryland or both. The contract should also include a source of drawings and purchase of hasps for the test.

6.6 First article. When first article testing and approval is required, the first article units should be selected and tested as specified in 3.2.2 and 4.4. The contracting officer should include specific instructions in acquisition documents regarding arrangements for examination, tests, availability of drawings of hasps required for tests, source(s) to purchase hasps for tests, disposition of padlocks tested, where tests are to be held (NCEL, IMA, or both),and approval of the first article. Invitations for bids should specify that the Government reserves the right to waive the requirement for bid samples or samples for first article inspection to those bidders offering a product which has been previously acquired or tested by the Government, and that bidders offering such products who wish to reply on such production or tests, must furnish evidence with the bid that prior Government approval is presently appropriate for and applicable to the pending contract.

6.7 Subject term (Keyword) listing.

Control Key
Cylinder assembly
Cylinder plug
Medium security padlock
Key, control
Key, operating
Keyway
Keyway, military
Operating key
Padlock, medium security
Padlock, key operated
Physical security
Physical security devices
Physical security hardware
Shackle

6.8 Changes from previous issue. Asterisks are not used in this revision to identify changes with respect to the previous issue due to the extensiveness of the changes.

Custodians:
Army - ME
Navy - YD
Air Force - 99

Review Activities:
Army - AR, GL
Air Force 82, SPCCE
DLA - IS

User Activities:
Army - AL, CE
Navy - AS, CG, MC, OS, SH

Preparing Activity:
Navy - YD

(Project 5340-1644)

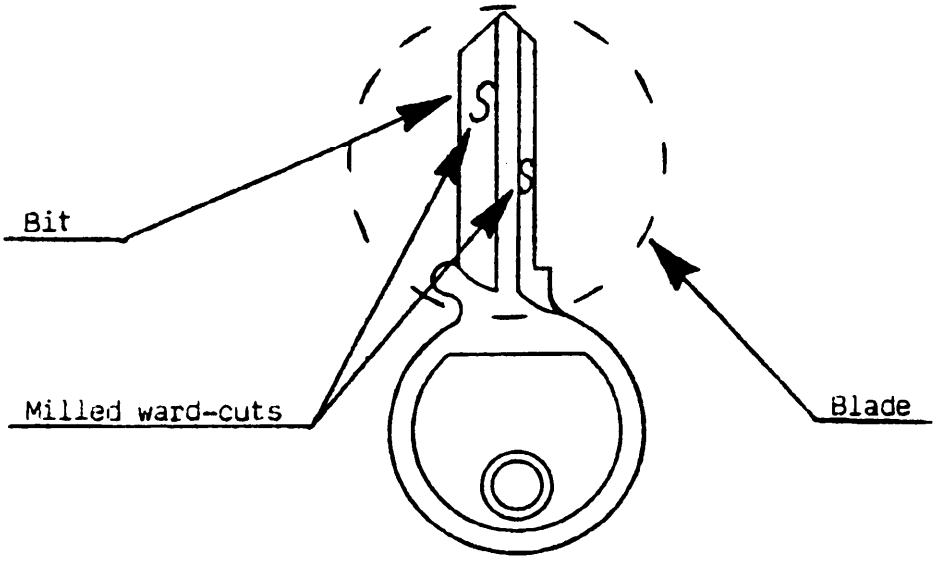

Milled key blank

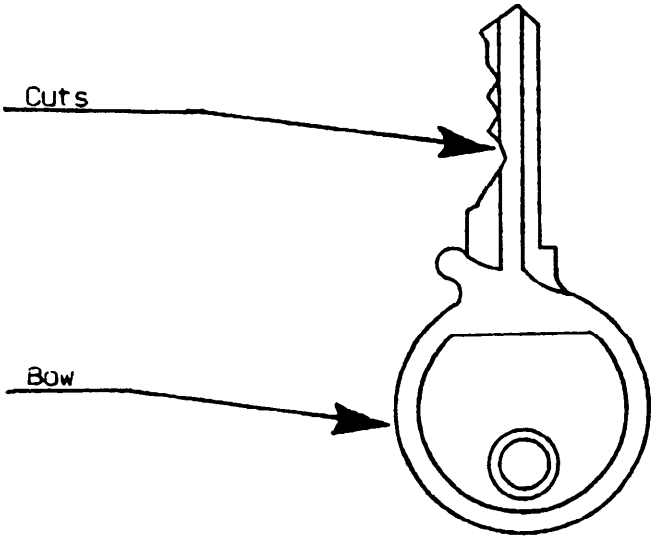

Bitted key

FIGURE 1 Key nomenclature.

(TO DETACH THIS FL , CUT ALONG THIS LINE.)

STANDARDIZATION DOCUMENT IMPROVEMENT PROPOSAL

(See Instructions – Reverse Side)

1. DOCUMENT NUMBER	2. DOCUMENT TITLE
MIL-P-43951A	PADLOCK, KEY OPERATED, MEDIUM SECURITY, REGULAR SHACKLE

3a. NAME OF SUBMITTING ORGANIZATION	4. TYPE OF ORGANIZATION *(Mark one)*
	☐ VENDOR
	☐ USER
b. ADDRESS *(Street, City, State, ZIP Code)*	☐ MANUFACTURER
	☐ OTHER *(Specify)*: _____

5. PROBLEM AREAS

a. Paragraph Number and Wording:

b. Recommended Wording:

c. Reason/Rationale for Recommendation:

6. REMARKS

7a. NAME OF SUBMITTER *(Last, First, MI)* – Optional	b. WORK TELEPHONE NUMBER *(Include Area Code)* – Optional
c. MAILING ADDRESS *(Street, City, State, ZIP Code)* – Optional	8. DATE OF SUBMISSION *(YYMMDD)*

DD FORM 82 MAR 1426

PREVIOUS EDITION IS OBSOLETE.

INSTRUCTIONS: In a continuing effort to make our standardization documents better, the DoD provides this form for use submitting comments and suggestions for improvements. All users of military standardization documents are invited to prov suggestions. This form may be detached, folded along the lines indicated, taped along the loose edge *(DO NOT STAPLE)*, a mailed. In block 5, be as specific as possible about particular problem areas such as wording which required interpretation, wa too rigid, restrictive, loose, ambiguous, or was incompatible, and give proposed wording changes which would alleviate the problems. Enter in block 6 any remarks not related to a specific paragraph of the document. If block 7 is filled out, an acknowledgement will be mailed to you within 30 days to let you know that your comments were received and are being considered.

NOTE: This form may not be used to request copies of documents, nor to request waivers, deviations, or clarification of specification requirements on current contracts. Comments submitted on this form do not constitute or imply authorization to waive any portion of the referenced document*(s)* or to amend contractual requirements.

(Fold along this line)

(Fold along this line)

DEPARTMENT OF THE NAVY

Commanding Officer (Code 156)
Naval Construction Battalion Center
Port Hueneme, CA 93043-5000

NO POSTAGE NECESSARY IF MAILED IN THE UNITED STATES

OFFICIAL BUSINESS
PENALTY FOR PRIVATE USE $300

BUSINESS REPLY MAIL
FIRST CLASS PERMIT NO. 12503 WASHINGTON D.C.

POSTAGE WILL BE PAID BY THE DEPARTMENT OF THE NAVY

Commanding Officer
Code 156
Naval Construction Battalion Center
Port Hueneme, CA 93043-5000