**INCH-POUND**

**MIL-STD-1366D**
**18 December 1998**
**SUPERSEDING**
**MIL-STD-1366C**
**27 February 1992**

# DEPARTMENT OF DEFENSE

# INTERFACE STANDARD FOR TRANSPORTABILITY CRITERIA

**AMSC NO A6709** **AREA PACK**

**DISTRIBUTION STATEMENT A. Approved for public release; distribution is unlimited.**

# FOREWARD

1. This military standard is approved for use by all departments and agencies of the Department of Defense (DOD).

2. This standard provides transportability performance requirements, interface criteria and test information for guidance in the design, development, and procurement of military materiel that falls within the framework of the DOD Engineering for Transportability program. Emphasis is placed upon the maximum dimensions and weights that worldwide transportation systems can interface with to ensure unrestricted transportability of materiel or equipment by all modes. Constraints applicable to each transportation mode are outlined, and critera are included for lifting and tiedown provisions, air delivery, shelters, overloads, assembly/disassembly, and intermodal cargo containers. The information in this standard is military-unique interface data consolidated specifically to ensure that military equipment meets the physical, functional and operational environment attributes for transportation assets of the Defense Transporation System (DTS). This interface data will assist in evaluating the transportability characteristics of military materiel that is currently fielded and provide performance criteria for military materiel under development. In addition to mode constraints, this standard also provides information and data to support risk/benefit and/or tradeoff analyses for items that do not meet certain transportability requirements to assess the potential impact on the overall deployment of a unit containing a particular piece of equipment. Furthermore, in the spirit of acquistion reform and consistent with efforts to lower overall costs for program managers, this standard includes information on modeling and simulation techniques and programs that are currently being used or are under development for transportability and deployability analyses.

3. Beneficial comments (recommendations, additions, or deletions) and any pertinent data which may be of use in improving this document should be addressed to Director, Military Traffic Management Command Transportation Engineering Agency (MTMCTEA), ATTN: MTTE-DPE, 720 Thimble Shoals Blvd, Suite 130, Newport News, VA 23606-4537 by using the Standardization Document Improvement Proposal (DD Form 1426) appearing at the end of this document or by letter.

CONTENTS


| PARAGRAPH | | PAGE |
|---|---|---|
| 1. | SCOPE | 1 |
| 1.1 | General | 1 |
| 1.2 | Applicability | 1 |
| 1.3 | Measurement units. | 1 |
| 2. | APPLICABLE DOCUMENTS | 1 |
| 2.1 | General | 1 |
| 2.1.1 | Specifications and standards | 1 |
| 2.1.2 | Other Government documents, drawings, and publications | 2 |
| 2.2 | Non-Government publications | 4 |
| 2.3 | Order of Precedence | 5 |
| 3. | DEFINITIONS | 5 |
| 3.1 | Airdrop (air delivery) | 5 |
| 3.2 | Athwartship | 5 |
| 3.3 | Breakbulk general-cargo ships | 5 |
| 3.4 | Cargo bed tiedown provision | 5 |
| 3.5 | CBTDEV | 5 |
| 3.6 | CONUS. | 5 |
| 3.7 | Curb weight | 5 |
| 3.8 | Cushioned draft gear railcar | 5 |
| 3.9 | Deck loading | 6 |
| 3.10 | Equipment tiedown provision | 6 |
| 3.11 | Extraction parachutes | 6 |
| 3.12 | Flatbed/flatrack cargo tiedown provision | 6 |
| 3.13 | Flatrack | 6 |
| 3.14 | Floor contact pressure | 6 |
| 3.15 | Fragile item | 6 |
| 3.16 | Gross weight | 6 |
| 3.17 | Hazardous material. | 6 |
| 3.18 | Internal aerial delivery | 6 |
| 3.19 | Item disassembly | 7 |
| 3.20 | Item reassembly | 7 |
| 3.21 | Large cargo tiedown provision | 7 |
| 3.22 | Lifting provision | 7 |
| 3.23 | Lighter | 7 |
| 3.24 | Light weight | 7 |
| 3.25 | Load limit | 7 |
| 3.26 | Logistics-Over-the-Shore (LOTS) | 7 |
| 3.27 | MATDEV | 7 |
| 3.28 | Multipurpose provision | 7 |
| 3.29 | Payload rating | 7 |
| 3.30 | Plane of the provisions | 8 |
| 3.31 | Potential transportability problem item | 8 |
| 3.32 | Recovery parachutes | 8 |

CONTENTS


| PARAGRAPH | | PAGE |
|---|---|---|
| 3.33 | Reporting marks | 8 |
| 3.34 | SEM (Systems/equipment/munitions) | 8 |
| 3.35 | Shipping configuration | 8 |
| 3.36 | Spreader bars | 8 |
| 3.37 | Standard draft gear railcar | 8 |
| 3.38 | Strategic deployment | 8 |
| 3.39 | Tactical deployment | 8 |
| 3.40 | Transportability | 9 |
| 3.41 | Transportability approval | 9 |
| 3.42 | Transportability engineering | 9 |
| 3.43 | Transportability engineering analysis | 9 |
| 3.44 | Transportability report | 9 |
| 3.45 | ‘Tween-deck | 9 |
| 3.46 | Vehicle payload | 9 |
| 4. | GENERAL REQUIREMENTS | 10 |
| 4.1 | Transportability criteria | 10 |
| 4.2 | DOD Engineering for transportability program | 10 |
| 4.3 | Transportability design responsibilities | 10 |
| 4.4 | Transportability problem item | 10 |
| 4.5 | Management of transportability problem items | 11 |
| 4.6 | Modeling and simulation | 11 |
| 4.7 | Force Projection Model (FPM) | 11 |
| 4.8 | Hazardous Materials Packaging and Transportation Requirements | 12 |
| 5. | DETAILED REQUIREMENTS | 12 |
| 5.1 | Highway transportation | 12 |
| 5.1.1 | General | 12 |
| 5.1.2 | CONUS highways | 12 |
| 5.1.2.1 | Unrestricted transport | 12 |
| 5.1.2.2 | US Federal Bridge Gross Weight formula | 13 |
| 5.1.2.3 | The National Network | 13 |
| 5.1.2.4 | US highway permit limits | 13 |
| 5.1.2.5 | Certification as Essential to National Defense | 14 |
| 5.1.2.6 | Safety | 14 |
| 5.1.3 | Foreign Highways | 14 |
| 5.1.4 | Military Load Classification (MLC) | 15 |
| 5.1.5 | Determining crew weights | 15 |
| 5.1.6 | Cargo tiedowns | 16 |
| 5.1.7 | Modeling and simulation for highway | 16 |
| 5.2 | Rail Transportation | 16 |
| 5.2.1 | General | 16 |
| 5.2.2 | North American rail | 17 |
| 5.2.2.1 | Railcar availability | 17 |
| 5.2.2.2 | Unrestricted transport | 17 |

CONTENTS


| PARAGRAPH | | PAGE |
|---|---|---|
| 5.2.2.3 | CONUS transport for equipment exceeding the AAR diagram | 17 |
| 5.2.2.4 | Typical vehicle loading on flatcars | 17 |
| 5.2.3 | Foreign rail | 23 |
| 5.2.3.1 | NATO railcar availability | 23 |
| 5.2.3.2 | NATO rail | 23 |
| 5.2.3.3 | NATO rail transport on major rail lines | 25 |
| 5.2.3.4 | Other foreign rail clearances | 25 |
| 5.2.4 | Comparison of loading diagrams | 25 |
| 5.2.5 | Rail impact testing | 25 |
| 5.2.6 | Modeling and simulation for rail | 30 |
| 5.3 | Water Transportation | 30 |
| 5.3.1 | General | 30 |
| 5.3.2 | Breakbulk general-cargo ships | 30 |
| 5.3.3 | Containerships | 30 |
| 5.3.3.1 | General | 30 |
| 5.3.3.2 | Full containerships | 32 |
| 5.3.4 | Combination ships | 32 |
| 5.3.5 | Barge Carriers | 32 |
| 5.3.5.1 | General | 32 |
| 5.3.5.2 | LASH | 32 |
| 5.3.5.3 | LASH Lighters | 32 |
| 5.3.5.4 | SEABEE | 32 |
| 5.3.5.5 | SEABEE barges | 36 |
| 5.3.6 | Roll-on/roll-off (RORO) ships | 36 |
| 5.3.6.1 | General | 36 |
| 5.3.6.2 | Large medium speed roll-on/roll-off ships (LMSR) | 36 |
| 5.3.6.3 | Fast sealift ships (FSS) | 36 |
| 5.3.6.4 | Cape D class | 44 |
| 5.3.6.5 | Cape H class | 44 |
| 5.3.6.6 | Miscellaneous RO/RO vessels | 44 |
| 5.3.7 | Support Vessels | 44 |
| 5.3.8 | Logistics-over-the-shore (LOTS) operations and inland waterways | 50 |
| 5.3.8.1 | General | 50 |
| 5.3.8.2 | Amphibian | 51 |
| 5.3.8.3 | Landing craft | 51 |
| 5.3.8.4 | Designing for transport aboard amphibious ships | 51 |
| 5.3.9 | Modeling and simulation for marine | 51 |
| 5.4 | Fixed-wing air transport | 54 |
| 5.4.1 | Flyable system weight | 54 |
| 5.4.2 | U.S. military fixed-wing cargo aircraft: | 54 |
| 5.4.3 | Design data | 55 |
| 5.4.4 | Aircraft cargo handling | 55 |
| 5.4.4.1 | Shoring | 55 |

CONTENTS


| PARAGRAPH | | PAGE |
|---|---|---|
| 5.4.4.2 | 463L cargo handling system | 55 |
| 5.4.5 | Air transport by DOD controlled aircraft | 55 |
| 5.4.5.1 | AMC and CRAF fixed-wing aircraft | 56 |
| 5.4.5.2 | AMC fixed-wing aircraft characteristics | 56 |
| 5.4.5.3 | AMC fixed-wing aircraft deployability | 56 |
| 5.4.5.4 | Navy and Marine Corps fixed-wing aircraft | 56 |
| 5.4.5.5 | Army fixed-wing aircraft | 56 |
| 5.4.6 | Modeling and simulation for fixed-wing aircraft | 56 |
| 5.5 | Air delivery by Low Velocity Airdrop (LVAD) | 65 |
| 5.5.1 | General | 65 |
| 5.5.2 | LVAD criteria | 66 |
| 5.5.3 | Airdrop platform | 66 |
| 5.5.4 | Modeling and simulation for airdrop | 66 |
| 5.6 | Rotary-wing air transport | 66 |
| 5.6.1 | General | 66 |
| 5.6.2 | Internal helicopter transport | 67 |
| 5.6.3 | External helicopter transport | 72 |
| 5.6.4 | NATICK certification | 72 |
| 5.6.5 | Modeling and simulation for rotary-wing transport | 76 |
| 5.7 | Lifting and tiedown provisions | 76 |
| 5.7.1 | General guidance | 76 |
| 5.7.2 | Equipment tiedown provisions | 76 |
| 5.7.3 | Lifting provisions | 77 |
| 5.7.4 | Multipurpose provisions | 77 |
| 5.7.5 | Cargo bed and flatbed/flatrack cargo tiedown provisions | 77 |
| 5.7.6 | Large cargo tiedown provisions | 77 |
| 5.7.7 | All provisions | 78 |
| 5.7.8 | Modeling and simulation for lifting and tiedown provisions | 78 |
| 5.8 | Intermodal cargo containers | 78 |
| 5.8.1 | Classification and dimensions of cargo containers | 78 |
| 5.8.2 | Designing for containerization | 81 |
| 5.8.3 | Rocket and missile containers | 82 |
| 5.8.4 | Flatracks. | 82 |
| 5.8.4.1 | ISO Flatracks. | 82 |
| 5.8.4.2 | FSS Flatracks | 82 |
| 5.8.4.3 | Heavy duty flatracks | 82 |
| 5.8.5 | Load Handling System (LHS) flatracks | 85 |
| 5.8.5.1 | Palletized Load System (PLS) M1077 flatrack | 85 |
| 5.8.5.2 | PLS M1 flatracks | 85 |
| 5.8.5.3 | PLS M3 flatracks (CROP) | 86 |
| 5.9 | Shelters | 86 |
| 5.9.1 | General | 86 |
| 5.9.1.1 | S-250 Shelter | 86 |

CONTENTS


| PARAGRAPH | | PAGE |
|---|---|---|
| 5.9.1.2 | Lightweight Multipurpose Shelter (LMS), S-788 | 86 |
| 5.9.1.3 | S-280 Shelter | 86 |
| 5.9.1.4 | ISO shelter | 86 |
| 5.9.2 | Shelter Transportability | 92 |
| 5.9.3 | Shelter Modifications | 92 |
| 5.9.4 | Nonstandard shelters | 92 |
| 5.10 | Overloads | 92 |
| 5.10.1 | General | 92 |
| 5.10.2 | Overload prevention | 93 |
| 5.10.3 | Other prime mover overload considerations | 93 |
| 5.10.4 | Designing for transport | 93 |
| 5.11 | Assembly/disassembly | 93 |
| 5.11.1 | General | 93 |
| 5.11.2 | Transportability design for assembly/disassembly | 93 |
| 6. | NOTES | 94 |
| 6.1 | Intended use. | 94 |
| 6.2 | Issue of DODISS | 94 |
| 6.3 | Data Requirements | 94 |
| 6.4 | Tailoring guidance for contractual application | 94 |
| 6.5 | Subject term (key word) listing | 94 |
| 6.6 | International standardization agreements | 95 |
| A.1. | GENERAL | 96 |
| A.1.1 | Scope | 96 |
| A.2. | APPLICABLE DOCUMENTS | 96 |
| A.3. | NOTATION | 96 |
| A.3.1 | Symbols | 96 |
| A.4. | GENERAL REQUIREMENTS | 96 |
| A.5. | DETAILED REQUIREMENTS | 96 |
| A.5.1 | Example | 96 |
| A.5.1.1 | Determine axle combinations to be analyzed | 96 |
| A.5.1.2 | Using bridge formula, determine maximum allowable loading for each axle combination. | 98 |

CONTENTS


| FIGURE | | PAGE |
|---|---|---|
| 1. | AAR outline diagram of single loads, without end overhang, on open-top cars (AAR diagram). | 20 |
| 2. | DOD rail clearance diagram. | 21 |
| 3. | Typical vehicle loading on HTTX flatcar (the OTTX is similiar). | 22 |
| 4. | Typical vehicle loading on TTDX flatcar (the ITTX is similiar). | 22 |
| 5. | GIC diagram. | 26 |
| 6. | NATO Envelope B. | 27 |
| 7. | Korean rail clearance diagram. | 28 |
| 8. | Comparison of loading diagrams. | 29 |
| 9. | LASH lighter characteristics. | 34 |
| 10. | LASH lighter characteristics. | 35 |
| 11. | SEABEE barge dimensional data. | 35 |
| 12. | Typical RORO loading traffic flow (USNS Gordon). | 37 |
| 13. | LMSR outboard profile (USNS Gordon). | 41 |
| 14. | LMSR inboard profile (USNS Gordon). | 41 |
| 15. | Typical LMSR end/side ramp positions (USNS Gordon). | 41 |
| 16. | Typical LMSR lashing pattern. | 42 |
| 17. | FSS general layout. | 42 |
| 18. | Profile of aft section of FSS. | 45 |
| 19. | Profile of mid section of FSS. | 45 |
| 20. | Profile of forward section of FSS. | 46 |
| 21. | Typical FSS lashing pattern. | 46 |
| 22. | Lighter, Amphibious (LARC-LX). | 53 |
| 23. | C-27/130/141 cross-sections. | 57 |
| 24. | C-17 and C-5 cross-sections. | 59 |
| 25. | UH-1 floor. | 72 |
| 26. | Container dimensions. | 79 |
| 27. | FSS flatrack. | 84 |
| 28. | PLS flatracks. | 87 |
| 29. | S-250 shelter (MIL-S-55541). | 88 |
| 30. | LMS shelter. | 89 |
| 31. | S-280 shelter. | 90 |
| 32. | ISO Shelter. | 91 |
| 33. | Sample case for determining bridge formula requirements. | 97 |

CONTENTS


| TABLE | | PAGE |
|---|---|---|
| 1. | Typical railcar characteristics | 18 |
| 2. | Characteristics of Deutsche Bundesbahn (DB) flatcars | 24 |
| 3. | Korean flatcar characteristics | 26 |
| 4. | Deck and hatch data of typical breakbulk vessels | 31 |
| 5. | Deck and hatch characteristics of a typical combination vessel | 33 |
| 6. | LMSR hold summary (USNS Gordon) | 38 |
| 7. | LMSR fixed-ramp characteristics (USNS Gordon) | 39 |
| 8. | Cargo hold door dimensions and locations (USNS Gordon) | 40 |
| 9. | FSS Hold Summary | 43 |
| 10. | FSS Fixed-ramp characteristics | 44 |
| 11. | RORO ship characteristics | 47 |
| 12. | Auxiliary ship characteristics | 49 |
| 13. | T-ACS Ship Crane Capabilities | 50 |
| 14. | LOTS Lighterage Compatibility | 51 |
| 15. | USA, USMC, and USN lighterage | 52 |
| 16. | Navy/Marine Corps fixed-wing cargo aircraft capabilities | 61 |
| 17. | Design contraints for Navy/Marine Corps fixed-wing aircraft | 62 |
| 18. | Crash restraint criteria for Navy/Marine Corps fixed-wing aircraft | 63 |
| 19. | Army fixed-wing cargo aircraft capabilities | 63 |
| 20. | Design contraints for Army fixed-wing aircraft | 64 |
| 21. | Crash restraint criteria for Army fixed-wing aircraft | 64 |
| 22. | LVAD rigged load height | 65 |
| 23. | LVAD acceptable item height | 65 |
| 24. | Maximum gross rigged weights for LVAD | 66 |
| 25. | Maximum allowable item weights for LVAD | 66 |
| 26. | Design constraints for Army rotary-wing aircraft | 68 |
| 27. | Crash restraint criteria for Army rotary-wing aircraft | 68 |
| 28. | Design constraints for Navy/Marine Corps rotary-wing aircraft | 69 |
| 29. | Crash restraint criteria for Navy/Marine Corps rotary-wing aircraft | 70 |
| 30. | Army rotary-wing aircraft internal load capabilities for 30 nautical mile radius mission | 70 |
| 31. | Navy/Marine Corps rotary-wing aircraft internal load capabilities for 30 nautical mile radius mission | 71 |
| 32. | Army rotary-wing aircraft external load capabilities for 30 nautical mile radius mission | 73 |
| 33. | Army rotary-wing aircraft external load capabilities for maximum range mission | 74 |
| 34. | Navy/Marine Corps rotary-wing aircraft external load capabilities for 30 nautical mile radius | 75 |
| 35. | Dry cargo ISO containers | 80 |
| 36. | Design limits for equipment requiring transport in containers | 81 |
| 37. | Maximum gross weight of container (fixed-wing) | 81 |
| 38. | FSS flatrack, dimensions, weight and capacities | 83 |

## 1. SCOPE

**1.1 General.** In accordance with the DOD Engineering for Transportability program, this standard establishes basic transportability criteria for the use in development and shipment of items of materiel. The standard covers dimensional and weight limitations for all modes of transport to ensure that new and modified systems meet the interface requirements of the Defense Transportation System (DTS) (highways, tunnels, bridges, railways, etc.) and the DTS assets (rotary and fixed wing aircraft, railcars, ships, barges, etc.) for unrestricted worldwide transport and deployment. It also covers lifting and tiedown provisions, containerization criteria, overloads, assembly/disassembly, air delivery, shelter criteria, transportability testing and modeling and simulation of the transportation environment. This standard will allow materiel development and procurement activities to design military equipment to meet the transportability requirements of various modes.

**1.2 Applicability.** This DOD interface standard is for use by the DOD acquisition community, to include the private sector, in the acquisition of defense materiel and systems. It should be included, by reference, in appropriate documentation of the DOD acquisition process to ensure acceptable transportability (see 3.40 on page 9). Reference of this standard in solicitations does not require a waiver since the Defense Standards Improvement Council (DSIC) approved this standard as an interface standard in May 1995.

**1.3 Measurement units.** This standard uses the measurement system, either English or metric, of the source material as the primary measurement. The conversion to the other measurements system is provided in parentheses.

## 2. APPLICABLE DOCUMENTS

**2.1 General.** The documents listed in this section are specified in sections 3, 4, and 5 of this standard. This section does not include documents cited in other sections of this standard or recommended for additional information or as examples. While every effort has been made to ensure the completeness of this list, document users are cautioned that they must meet all specified requirements documents cited in sections 3, 4, and 5 of this standard, whether or not they are listed.

**2.1.1 Specifications and standards.** The following specifications and standards form a part of this document to the extent specified herein. Unless otherwise specified, the issues of these documents are those listed in the issue of the Department of Defense Index of Specifications and Standards (DODISS) and supplement thereto cited in the solicitation (see 6.2 on page 94).

STANDARDS

MILITARY

| | |
|---|---|
| MIL-STD-209 | *Interface Standard for Lifting and Tiedown Provisions* |
| MIL-STD-810 | *Environmental Test Methods and Engineering Guidelines* |

| | |
|---|---|
| MIL-STD-814 | *Requirements for Tiedown, Suspension, and Extraction Provisions on Military Materiel for Airdrop* |
| MIL-STD-910 | *Mobile Tactical Systems Overload Prevention Procedures* |
| MIL-STD-913 | *Requirements for Certification of Externally Transported Military Equipment by Department of Defense Rotary Wing Aircraft* |
| MIL-STD-1472 | *Human Engineering Design Criteria for Military Systems, Equipment and Facilities* |

HANDBOOKS

MILITARY

| | |
|---|---|
| MIL-HDBK-669 | *Loading Environment and Related Requirements for Platform Rigged Airdrop Materiel* |
| MIL-HDBK-759 | *Human Factors Engineering Design for Army Materiel* |
| MIL-HDBK-1791 | *Designing for Internal Aerial Delivery in Fixed-Wing Aircraft* |

(Unless otherwise indicated, copies of above specifications and standards are available from the Standardization Documents Order Desk, Building 4D, 700 Robbins Avenue, Philadelphia, PA 19111-5094, phone number (215) 697-2179, facsimile (215) 697-1462.)

**2.1.2 Other Government documents, drawings, and publications.** The following documents form a part of this document to the extent specified herein. Unless otherwise indicated, the issues are those cited in the solicitation.

CODE OF FEDERAL REGULATIONS

*CFR Title 23 Highways*

*CFR Title 49 Transportation*

(Obtain copies from the Superintendent of Documents, US Government Printing Office, Washington, DC 20402, (202) 512-1800.)

MANUALS

MILITARY

| | |
|---|---|
| FM 5-170 | *Engineer Reconnaissance* |

| | |
|---|---|
| TM 5-312 | *Military Fixed Bridges* |
| AFJMAN 24-204/ TM 38-250/ NAVSUP PUB 505/ MCO P 4030.19/ DLAI 4145.3 | *Preparing Hazardous Materials for Military Air Shipment* |

(Obtain copies from the procuring activity or as directed by the contracting officer.)

DATA ITEM DESCRIPTIONS

| | |
|---|---|
| DI-PACK-80880A | *Transportability Report* |

(Obtain copies from the procuring activity or as directed by the contracting officer.)

MILITARY TRAFFIC MANAGEMENT COMMAND TRANSPORTATION ENGINEERING AGENCY

MTMCTEA Reference 70-1 *Transportability and Deployability for Better Strategic Mobility*

*Directory of Highway Permit and Mobilization Control (MOBCON) Officials*

(Obtain copies from the Director, MTMCTEA, 720 Thimble Shoals Blvd., Suite 130, ATTN: MTTE-DPE, Newport News, VA 23606-4537 or download from the internet at http://www.tea-army.org/dpe/.)

DEPARTMENT OF DEFENSE

| | |
|---|---|
| DOD Directive 5000.1 | *Defense Acquisition* |

(Obtain copies from http://web7.whs.osd.mil/dodiss/directives/direct7.htm)

| | |
|---|---|
| DOD 4500.9-R | *Defense Transportation Regulation (DTR), Part III, Mobility* |

(Obtain copies from the Defense Technical Information Center, 8725 John J. Kingman, Fort Belvoir, VA 22060 or the U.S. Department of Commerce, National Technical Information Service, 5285 Port Royal, Springfield, VA 22161.)

AIR FORCE

| | |
|---|---|
| AF PAM 10-1403 | *Air Mobility Planning Factors* |

(Obtain copies from the procuring activity or as directed by the contracting officer.)

**2.2 Non-Government publications.** The following documents form a part of this document to the extent specified herein. Unless otherwise specified, the issues of these documents are those listed in the DODISS cited in the solicitation. Unless otherwise specified, the issues of documents not listed in the DODISS are the issues of the documents cited in the solicitation.

ASSOCIATION OF AMERICAN RAILROADS

*Field Manual of the AAR Interchange Rules*

*Outline Diagram for Single Loads, Without End Overhang, on Open-Top Cars*

*Universal Machine Language Equipment Register*

(Obtain copies from the Association of American Railroads, 50 F Street NW, Washington DC 20001-1564).

INTERNATIONAL ROAD FEDERATION

*Limits of Motor Vehicle Sizes and Weights*

(Obtain copies from the International Road Federation, 525 School Street SW, Washington, CD 20024.)

NATO STANDARDIZATION AGREEMENT (STANAG)

| | |
|---|---|
| STANAG 2021 ENGR | *Computation of Bridge, Ferry, Raft, and Vehicle Classifications* |
| STANAG 2175 VF | *Classification and Designation of Flat Wagons Suitable for Transporting Military Vehicles and Equipment* |
| STANAG 2413 MH | *Demountable Load Layering Platforms (DLLP)* |

(Obtain copies from the Standardization Documents Order Desk, Building 4D, 700 Robbins Avenue, Philadelphia, PA 19111-5094, phone number (215) 697-2179, facsimile (215) 697-1462.)

R.E.R. PUBLISHING CORPORATION, AGENT

*The Official Railway Equipment Register*

(Obtain copies from the R.E.R. Publishing Corporation, Agent, 424 West 33rd Street, New York, NY 10001-2604.)

AMERICAN SOCIETY OF TESTING AND MATERIALS

ASTM E 1925 *Engineering and Design Criteria for Rigid Wall Relocatable Structures*

(Obtain copies from the American Society for Testing and Materials, 100 Barr Harbor Drive, West Conshocken, PA 19428.)

**2.3 Order of Precedence.** In the event of a conflict between the text of this document and the references cited herein, the text with the most severe requirement will take precedence.

## 3. DEFINITIONS

For the purpose of this document, the following definitions apply.

**3.1 Airdrop (air delivery).** A tactical aircraft operation for the delivery of supplies or equipment by dropping cargo from the aircraft (fixed or rotary-wing) in flight. The supplies or equipment can be dropped free-fall or parachute retarded.

**3.2 Athwartship.** Across the ship from side to side.

**3.3 Breakbulk general-cargo ships.** Breakbulk ships are designated as general cargo ships because of their ability to carry a variety of cargo. Cargo loading/unloading operations are accomplished via lift-on/lift-off using shipboard or pierside cranes.

**3.4 Cargo bed tiedown provision.** A padeye, fixture, or attachment integral to the cargo compartments of trucks or trailers for securing cargo or accessories.

**3.5 CBTDEV.** The Combat Developer (CBTDEV) is the command or agency that formulates doctrine, concepts, organization, materiel requirements and objectives. It may be used generically to represent the user community role in the materiel acquisition process (counterpart to generic part of MATDEV).

**3.6 CONUS.** Continental United States.

**3.7 Curb weight.** For light tactical vehicles, the curb weight is the weight of the vehicle with basic issue items on board and with a full load of fuels and lubricants. For medium and heavy tactical vehicles, the curb weight includes the weight of the truck (or trailer), including materials handling equipment (if applicable), with all kits, attachments, accessories, equipment, basic issue items and full complement of fuel, lubricants, coolants hydraulic fluid, and crew.

**3.8 Cushioned draft gear railcar.** Any railcar equipped with center or end-of-car cushioning devices. Cushioned draft gear railcar cushioning devices are covered by Rule 59 in the *Field Manual of the AAR Interchange Rules*. In general, the distance of draft gear (or center

sill of railcars with cushioned underframe) travel from normal position to maximum extension for one end of car is 5 inches or greater.

**3.9 Deck loading.** For water transport only, the deck loading is the weight of the SEM distributed over the SEM's shadow area (length times width of the SEM) not including small protrusions such as the gun barrel on a tank. Also known as deck strength.

**3.10 Equipment tiedown provision.** An integral part of an item, commonly called a tiedown eye, fixture, or attachment. A tiedown provision provides a means of attaching a tiedown lashing to the equipment for tiedown purposes during shipment.

**3.11 Extraction parachutes.** One or more parachute(s) (usually smaller than main parachute) used to withdraw an airdropped item from the aircraft.

**3.12 Flatbed/flatrack cargo tiedown provision.** A padeye, fixture, or attachment integral to a flatbed trailer or flatrack used as a demountable truck or trailer bed for securing cargo or accessories.

**3.13 Flatrack.** Cargo carrying platform, of a permanent character, suitable for repeated use. Flatracks generally do not have sidewalls or a roof structure, and will have open or paneled end walls.

**3.14 Floor contact pressure.** The resultant pressure exerted by the weight of systems/ equipment/munitions (SEM) on the carrying surface of the transporter through the portions of the SEM actually in contact with the carrying surface.

**3.15 Fragile item.** An item of SEM that is susceptible to damage and/or loss of serviceability during transport and handling. It requires special shipping procedures or equipment, environmental control, or special packaging for protection during transport.

**3.16 Gross weight.** The weight of the basic equipment (curb weight for vehicles) plus the weight of any associated support items of equipment (ASIOE) and cargo attached to the equipment, contained within the equipment, or projected as payload for the equipment (that is, shelters). For light tactical vehicles, crew weight and pintle load are considered as payload. The weight of ammunition and/or additional fuels and lubricants (to include water) necessary to render the system combat ready is also considered as payload.

**3.17 Hazardous material.** A substance or device that, as determined by the Secretary of Transportation, could pose an unreasonable risk to health, safety, and property when transported in commerce and is so designated in the table set forth in 49 Code of Federal Regulations (CFR) 172.101. Included are explosives; flammable, combustible, and pyrophoric liquids; flammable solids; oxidizers, and organic peroxides; corrosive materials; compressed gases; poisons and irritating materials; etiologic agents; and radioactive materials.

**3.18 Internal aerial delivery.** Internal air transport aboard military prime mission cargo aircraft or Civil Reserve Air Fleet (CRAF) aircraft.

**3.19 Item disassembly.** Removal of parts of an item to reduce its physical characteristics (weight and dimensions) so that transport limitations are not exceeded.

**3.20 Item reassembly.** Replacement of parts on an item to restore the item to its operational configuration.

**3.21 Large cargo tiedown provision.** A padeye, fixture, or attachment integral to cargo trucks and trailers, flatbed trailers and flatracks used as a demountable truck or trailer bed for securing large, heavy items.

**3.22 Lifting provision.** An integral part of the equipment, commonly called a padeye, lug, eye, or attachment. A lifting provision provides a means of attaching a sling to the equipment for safe lifting.

**3.23 Lighter.** A vessel, commonly flat-bottomed, used in loading/unloading ships in logistics-over-the-shore (LOTS) operations.

**3.24 Light weight.** The empty weight of a railroad car including its trucks and any other appurtenances considered standard to the railcar. The light weight is stenciled on every freight car in conjunction with the capacity and load limit stenciling, and is abbreviated LT WT.

**3.25 Load limit.** The maximum weight that can be loaded on a railcar. For railcars meeting standard AAR design criteria, the load limit is equal to the maximum allowable gross weight on the rails (determined by axle and wheel size) less the light weight of the railcar. Load limit is stenciled on every freight car in conjunction with the capacity and light weight stenciling and is abbreviated LD LMT.

**3.26 Logistics-Over-the-Shore (LOTS).** Logistics Over The Shore (LOTS) - Transferring military equipment and supplies from cargo ships anchored offshore to the beach in support of forces ashore. During strategic deployments, most military equipment will be transported by ship. There may be occasions, however, when improved ports are not available because of poor host nation port infrastructure, sabotage, etc. LOTS provides both an alternative as well as a supplemental method to move equipment from sealift ships to shore. (Also known as Joint Logistics Over The Shore (JLOTS).)

**3.27 MATDEV.** The Materiel Developer (MATDEV) is the research, development, and acquisition (RDA) command, agency, or office (Program Manager (PM)/Program Executive Office (PEO)) assigned responsibility for the system under development or being acquired. The term may be used generically to refer to the RDA community in the materiel acquisition process (counterpart to the generic use of CBTDEV).

**3.28 Multipurpose provision.** A single provision that meets the requirements of this standard for both lifting and equipment tiedown.

**3.29 Payload rating.** The maximum weight a vehicle is designed to safely transport.

**3.30 Plane of the provisions.** A geometric plane connecting the centers of all lifting provisions of an item of equipment.

**3.31 Potential transportability problem item.** An equipment item in its proposed shipping configuration that, because of its size or weight, or lack of adequate means for lifting and tiedown, may be denied movement. It may require special permits or waivers and/or special equipment or handling, or may be unacceptably delayed when moving within existing or newly designed transportation systems. A more detailed, technical definition of a transportability problem item is given in section 4 (see 4.4 on page 10) of this military standard.

**3.32 Recovery parachutes.** Parachutes used during airdrop delivery to retard and stabilize the descent of an airdrop item.

**3.33 Reporting marks.** Lettering appearing on the sides of all freight cars identifying ownership such as marks including TTX for TTX Company (formerly Trailer Train Company), DODX for Department of Defense (MTMC Deployment Support Command), or BNSF identifying cars of the Burlington Northern Santa Fe railroad company. The "X" denotes private ownership as differentiated from railroad ownership. The first letters used with TTX are arbitrary designations used to differentiate various car types.

**3.34 SEM (Systems/equipment/munitions).** All items and item components necessary for equipping, maintaining, operating, and supporting military activities, without distinction as to their application for administrative or combat purposes, excluding ships.

**3.35 Shipping configuration.** The item/system configuration, stated in weights and dimensions, that a military unit will use for transport. It also includes the restraint arrangement for safe transport of the item/system.

**3.36 Spreader bars.** A bar, set of bars, or other framework used during lifting operations to prevent lifting sling legs from damaging an item by compression, friction, and so forth.

**3.37 Standard draft gear railcar.** Any railcar that is not equipped with center or end-of-car cushioning devices. The standard draft gear devices in these railcars are covered in Rule 21 of the Field Manual of the AAR Interchange Rules. Typical travel is usually less than 3 inches (76 mm). Railcars having standard draft gear are so listed in the Universal Machine Language Equipment Register (UMLER) files maintained by the AAR.

**3.38 Strategic deployment.** The continuous or sustained movement of units, personnel, and logistic support items between CONUS and overseas areas and between area commands.

**3.39 Tactical deployment.** Deployment of units, personnel, and logistic support items within a theater of operations. The C-130 aircraft, helicopters and landing craft are examples of tactical transporters.

**3.40 Transportability.** The inherent capability of an item to be moved efficiently by towing, self-propulsion, or carrier, using existing equipment or equipment that is planned for the movement of the item via rail, highway, water, and air. Full consideration of available and projected transportation assets, mobility plans and schedules, and the impact of system equipment and support items on the strategic mobility of operating military forces is required to achieve this capability.

**3.41 Transportability approval.** A statement by the Director, MTMCTEA, that an item of materiel, in its shipping configuration, is transportable by the mode(s) of transportation specified in development guides or materiel requirements, or meets amended transportability characteristics approved by higher authority.

**3.42 Transportability engineering.** The performance of those functions required to identify and measure the limiting constraints, characteristics, and environments of transportation systems; integrate these data into design criteria for effective operational and planned transportation capability; and develop technical transportability guidance.

**3.43 Transportability engineering analysis.** An analysis of the transportability of an SEM item or its components, which assesses its ability to be transported by the modes specified in the materiel requirements documents.

**3.44 Transportability report.** An information package, submitted on a potential transportability problem item during SEM development/acquisition. It contains all the information necessary for performing a comprehensive transportability engineering analysis. The transportability report is prepared by the materiel developer or contractor in accordance with the format and content of Data Item Description, DI-PACK-80880A and MTMCTEA Reference 94-70-1, *Transportability and Deployability for Better Strategic Mobility.* The materiel developer is responsible for submitting this report to the appropriate transportability agent.

**3.45 ‘Tween-deck.** In this context, ’tween-deck refers to a temporary deck between two permanent decks on a ship. A ‘tween deck is also called a “hoistable” deck.

**3.46 Vehicle payload.** For light tactical vehicles, payload is any load placed in or on the vehicle that increases the vehicle weight above the curb weight. Payload includes the weight of the driver and passengers (crew), weight of crew’s personal gear, cargo, water cans, table of organization and equipment or common table of allowances items, kits, communications and electronics equipment, cargo cover kits, shelterized systems (including the weight of the shelter), ammunition and/or additional fuels and lubricants (to include water) necessary to render the system combat ready. The trailer tongue load must be included as a part of the payload for Group II High Mobility Multipurpose Wheeled Vehicles (HMMWVs), Heavy HMMWV Variants (HHVs) and HMMWV Expanded Capacity Vehicles. Tongue loads in excess of 200 pounds must be counted as part of the payload for the Group I HMMWV models. For medium and heavy tactical vehicles, the payload shall include cargo only.

## 4. GENERAL REQUIREMENTS

**4.1 Transportability criteria.** This standard provides the interface requirements to design an item of equipment to be transported through the Defense Transportation System (DTS). The information provides the critical characteristics, both for the transport vehicle and transportation system. In addition to updating data contained in the previous version, this version incorporates characteristics of new transporters, including the C-17 aircraft, the Large Medium Speed Roll-on/Roll-off (LMSR) sealift vessels, DODX railcars, and the V-22 tilt-rotor aircraft. We have also included more detailed information concerning transport in Air Force cargo aircraft, and added amphibious ships characteristics.

**4.2 DOD Engineering for transportability program.** This program provides for the inclusion of transportability/deployability requirements in the design of end items of equipment obtained through the materiel acquisition process for the military services.

Transportability is important throughout the acquisition cycle. However, it is essential that transportability be considered at the beginning of the materiel acquisition process when the impact on design is the greatest. Incorporation of transportability characteristics into the initial concepts and designs minimizes the impact on program cost and schedule. It is easier and less costly to incorporate equipment characteristics that support transport into the initial design than it is to alter or retrofit actual hardware.

Transportability is equally important in other stages of the acquisition cycle. The omission of transportability considerations during the middle or later stages of the cycle, or deletion during tradeoff decisions, can negate all transportability efforts and advances made during the early stages.

DOD Directive 5000.1, *Defense Acquisition*, establishes deployment into the operational environment as a part of the Total System Approach to acquisition. The Engineering for Transportability program accomplishes this consideration. Transportability is a consideration for all acquisition categories and all acquisition sources, including new or modified equipment, rebuys, and commercial or non-developmental systems.

**4.3 Transportability design responsibilities.** The materiel developer and/or contractor shall be responsible for incorporating transportability considerations into equipment design.

**4.4 Transportability problem item.** An SEM item is considered a transportability problem item when any of the following conditions apply:

a. The item is wheeled or tracked, and is to be towed, hauled, or self-propelled on or off highway.

b. The item increases the physical characteristics of the designated transport medium.

c. The item requires special handling or specialized loading procedures.

d. The item has inadequate ramp clearance for ramp inclines of 15 degrees.

e. Exceeds any of the following conditions:

(1) Length - 20 feet (6096 mm, 240 in).

(2) Width - 8 feet (2438 mm, 96 in).

(3) Height - 8 feet (2438 mm, 96 in).

(4) Weight - 10,000 pounds (4,536 kg).

(5) Weight per linear foot - 1,600 pounds/foot (2381 kg/m).

(6) Floor contact pressure - 50 psi (344.7 kPa).

**4.5 Management of transportability problem items.** If an SEM item meets any of the conditions listed in 4.4a-4.4d, or exceeds the criteria of 4.4e, a transportability report shall be submitted by the materiel developer (MATDEV) to the appropriate service transportability agent. The report shall be prepared by the materiel developer or contractor and shall be in accordance with the format and content of Data Item Description, DI-PACK-80880A (see 6.2 on page 94).

**4.6 Modeling and simulation.** Transportability engineering analysis of SEM includes the use of modeling and simulation tools for both dimensional fit and structural adequacy for all modes of transport. The Virtual Proving Ground - Transportability (VPG-T) provides the tools to support modeling and simulation of the transportation environment. Within VPG-T are tools using 3D modeling, multibody dynamic analysis, and structural analysis software to simulate and analyze physical restrictions and forces encountered in transportation, and related transportation tests. 3D modeling supports analyses of dimensional clearances reflecting both physical and legal restrictions. Multibody dynamic analysis is used to establish loading clearances and procedures. Structural analysis allows engineers, using detailed models of equipment and parts, to analyze their structural integrity under various loading scenarios using Finite Element Analysis (FEA) software. The tool is also useful for analysis of failure to guide redesign. Structural analysis may be used in place of testing in some instances.

By analyzing transport-loading scenarios, it is possible to facilitate successful design very early in the process, reducing the number of failed field tests, and in certain cases eliminating the need to test. Examples of specific uses of VPG-T tools are included in Section 5 "Detailed Requirements" for each of the modes of transport.

**4.7 Force Projection Modeling Program.** The Force Projection Modeling Program is a suite of existing and new deployment modeling and simulation tools. Planners and analysts can use these tools to evaluate the force projection of units (personnel, equipment, and supplies) from their base or installation, to the port of embarkation (POE), through the port of debarkation (POD), to the tactical assembly area in theater. These tools model in detail the interaction of infrastructure and transport system with the detailed characteristics of the force and the projected

throughput capability of ports and installations. FPM can be used to evaluate what effect the incorporation of an equipment item will have on force deployment. This helps clarify future transportation savings or costs in terms of transportation assets and deployment times.

**4.8 Hazardous Materials Packaging and Transportation Requirements.** In addition to the transportability criteria identified in this document, all shipments of hazardous materials will also comply with applicable modal packaging and transportation requirements as identified in AFJMAN 240-204/TM 38-250/NAVSUP PUB505/MCO P4030.19/DLAM 4145.3 - *Preparing Hazardous Materials for Military Air Shipment*, 49 CFR, The *International Maritime Dangerous Goods Code* and the United Nation's *Recommendation on the Transportation of Dangerous Goods*.

## 5. DETAILED REQUIREMENTS

### 5.1 Highway transportation.

**5.1.1 General.** Highway transport vehicles developed for over-the-road movement should meet the physical, legal, and administrative limitations on roadways, bridges, and other structures imposed by Federal, State, and local transportation authorities. This document summarizes general size and weight constraints of CONUS and various foreign highway systems. These limits establish guidelines to ensure that new military highway transport equipment is compatible with the capabilities and limitations of CONUS and foreign highway systems. This is important, since military vehicles are not normally exempt from Federal, State, or local size and weight limitations.

**5.1.2 CONUS highways.**

**5.1.2.1 Unrestricted transport.** Federal weight limits apply to vehicles and vehicle cargo combinations on Interstate highways. States may issue permits for nondivisible vehicles or loads. On other non-interstate highways, the state establishes weight limits. Federal length and width limits apply to the National Network (see 23 CFR 658 Appendix A). These provisions preempt conflicting state laws and regulations. There is no federal law on height. The size and weight legal limits of the interstate or National Network vary from State to State. The "Summary of Size and Weight Limits" in appendix A of the *Directory of Highway Permit and Mobilization Control (MOBCON) Officials* is prepared by the American Trucking Association, Inc. and summarizes the State legal limits for moves of oversize and overweight equipment. To ensure general unrestricted CONUS highway transport, vehicles and vehicle cargo combinations shall be designed to the following constraints when unrestricted CONUS highway transport is a requirement:

| | |
|---|---|
| Height | 162 inches (4115 mm, 13.5 ft) |
| Width | 96 inches (2438 mm, 8 ft) |

| | |
|---|---|
| Length | 40 feet for a single unit (12192 mm, 480 in)<br>55 feet for a combination unit (16 764 mm, 660 in)<br>48 feet for a semitrailer (14 630 mm, 576 in) |
| Single axle load | 20,000 pounds (9072 kg) |
| Tandem axle load | 34,000 pounds (15 422 kg) |
| Triple axle load | 42,000 pounds (19 051 kg) (3 States have lower limits) |
| Gross vehicle weight | *80,000pounds (36 287 kg) |

*NOTE: The gross vehicle weight constraint is also dependent on the Federal Bridge Gross Weight formula, which is presented in 5.1.2.2.

**5.1.2.2 US Federal Bridge Gross Weight formula.** The bridge gross weight formula specifies the relationship between the axle (or groups of axles) spacing and the weight that the axle(s) may carry to prevent overstressing highway bridges. The bridge formula is:

$$W = 500 (LN/(N-1) + 12N + 36)$$

where:

W = overall gross weight on any group of two or more consecutive axles to the nearest 500 pounds

L = distance in feet between the outer axles of any two or more consecutive axles

N = number of axles in the group under consideration

The bridge formula is incorporated into Title 23 CFR 658. A sample problem for determining bridge formula requirements is in appendix A of this military standard.

**5.1.2.3 The National Network.** The National Network has been identified based on which large vehicles authorized by the Surface Transportation Assistance Act (STAA) of 1982 are allowed to operate. One configuration allowed to travel on the National Network is the truck tractor-semitrailer-trailer combination. (Trailers must be no longer than 28 feet (8534 mm, 336 in) for unrestricted National Network transport.) This network includes the Interstate System plus other qualifying Federal-Aid Primary System Highways. Title 23 CFR 658 establishes the requirements for highway transport on the National Network and identifies the network.

**5.1.2.4 US highway permit limits.** The US highway permit limits are constraints within which a State will allow highway transport under its permit procedures when unrestricted highway transport is not possible. The conditions for which a State will issue movement permits without certification as essential to the national defense are in the *Directory of Highway Permit and MOBCON Officials*. Note that these limits are adjusted by particular conditions at movement

time and should be verified with the appropriate State highway official prior to highway transport. Vehicles and vehicle cargo combinations shall meet the permit limit criteria in the *Directory of Highway Permit and MOBCON Officials* when US highway transport within permit limitations is a requirement.

**5.1.2.5 Certification as Essential to National Defense.** "Certification for highway movement essential to national defense is certification by an appropriate military authority that the cargo is "essential cargo". The oversize or overweight shipment cannot be reduced in size or weight and the shipment must be moved via highway. This certification is a means to inform regulatory authorities of the importance of the movement to allow maximum flexibility in approving the permit. This materiel must be eligible for highway movement in accordance with the provisions of DOD 4500.9-R, *Defense Transportation Regulation (DTR), Part III, Mobility.* Training, maintenance, and public-relations mission movements, or savings of transportation cost or time, are not justifications for meeting certification requirements. Once the installation commander determines that the materiel meets the requirements, he/she must request that the major Army Command (MACOM) commander of the shipping command certify the movement is essential to national defense for movements by other than commercial carriers. Local installation commanders cannot make this certification. Certification that the movement is essential to national defense does not guarantee that US highway authorities will allow movement. States have absolute authority over their public roadways both in peacetime and wartime and will make all final determinations of transport capability.

**5.1.2.6 Safety.** For movement on public highways, reference shall be made to safety, lighting, brake, and stopping-distance specifications currently required for commercial vehicles by the US Department of Transportation. Vehicles and vehicle cargo combinations shall meet the safety requirements of Title 49 CFR.

**5.1.3 Foreign Highways.** The weight and dimensional constraints at which vehicles and vehicle cargo combinations can move on foreign highways without permits constitute the foreign legal limits. These weight and dimensional legal limits vary from country to country.

Because such a wide variation exists in the foreign legal limits and some countries have limited highway systems, the following constraints are recommended to achieve general unrestricted transport in most North Atlantic Treaty Organization (NATO) countries:

| | | |
|---|---|---|
| Width | 2.44 meters | (8 ft, 96.1 in) |
| Height | 4.00 meters | (13.12 ft, 157.5 in) |
| Length | 10.00 meters - single unit (32.81 ft, 393.7 in)<br>14.00 meters - combination unit (45.93 ft, 551.2 in) | |
| Single axle load | 10 000 kg | (22,046 pounds) |
| Tandem axle load | 16 000 kg | (35,274 pounds) |

Gross vehicle weight is dependent on the vehicle type, as defined in the *Limits of Motor Vehicle Sizes and Weights*. Vehicles and vehicle cargo combinations shall have a military load classification number less than 50, and meet the requirements of this paragraph and 5.1.2.1 when unrestricted worldwide highway transport is a requirement.

For unrestricted highway transport in Korea the following apply:

| | | |
|---|---|---|
| Width | 3.00 meters | (9.84 ft, 118.1 in) |
| Height | 4.00 meters | (13.12 ft, 157.5 in) |
| Length | 17.00 meters | (55.77 ft, 669.3 in) |
| | 19.00 meters | (62.34 ft, 748.0 in) |
| | (twin combinations on four-lane expressway) | |
| Single axle load | 10 000 kg | (22,046 pounds) |
| Tandem axle load | 16 000 kg | (35,274 pounds) |
| Gross weight | 40 000 kg | (88,185 pounds) |

**5.1.4 Military Load Classification (MLC).** FM 5-170, STANAG 2021, and TM 5-312 provide guidance on route reconnaissance and classification. To make maximum use of existing routes, the military load-carrying capacity of the routes in a basic military road network must be determined. This process is called classification. The MLC system assigns whole numbers to vehicles, bridges, roads, and routes. Usually, the lowest bridge MLC number determines the MLC of a route. The materiel developer should request that MTMCTEA obtain an MLC from the Tank-Automotive and Armaments Command (TACOM) for vehicles and vehicle cargo combinations during the engineering and manufacturing development phase of acquisition. Vehicles and vehicle cargo combinations shall be designed to the MLC requirement.

**5.1.5 Determining crew weights.** The materiel developer must account for the weight of the crew when determining the gross vehicle weight (GVW) and axle loads of highway transporters. Also, the crew weight is considered a part of the payload for vehicles with payloads less than 4,400 pounds (1134 kg). This weight includes the soldier's body weight plus the weight of the soldier's basic load of clothing, ammunition, individual equipment and weapon, and food. MTMCTEA identifies planning guidelines for crewmember weights as follows:

| Total Crew Weight | |
|---|---|
| Single-Soldier Crew | 295 pounds (133.8 kg) |
| Two-Soldier Crew | 566 pounds (256.7 kg) |
| Three-Soldier Crew | 828 pounds (375.6 kg) |
| Four-Soldier Crew | 1,080 pounds (489.9 kg) |

These weight figures include 19.47 pounds (8.83 kg) of clothing, 39.22 pounds (17.79 kg) of equipment, and 31.24 pounds (14.17 kg) of existence load per person. Weight variances for multiple size crews account for reduced probability of several 95th percentile crewmembers being assigned to the same system. Allowances shall be made to accommodate increases in the crew weight due to operations in cold weather scenarios. For cold weather scenarios, the clothing weight will increase to 34 pounds (17.69 kg) and the equipment weight will increase to 49 pounds (22.23 kg) per person. This means a single-soldier crew weight will be 316 pounds (143.3 kg). The information in this paragraph is based on information in MIL-STD-1472 and MIL-HDBK-759. The materiel developer/contractor shall meet the requirements of this paragraph when determining crew weights for highway transport.

**5.1.6 Cargo tiedowns.** Items transported on cargo vehicles need to be secured to prevent movement and damage during highway shipment. The items need to be secured to:

.7 times the weight of item in the forward longitudinal direction:
.3 times the weight of the item in the aft longitudinal and lateral directions; and
.5 times the weight of the item in the vertical upward direction.

The forward longitudinal requirement was derived from the vehicle-braking requirement in the Title 49 CFR. The other requirements were established based on standard Civil Engineering practices for safe highway design.

If the vehicle itself, with its payload, is going to be transported, the payload (secondary load) must be secured to the requirements for planned transport modes. The payload becomes the secondary load, with the transported vehicle being the primary load. The secondary load restraints required for highway transport are not as restrictive as those required for other modes.

**5.1.7 Modeling and simulation for highway.** For highway transport, 3D modeling supports establishing procedures for loading and securing equipment to transport vehicles. This helps resolve issues of compatibility and allows publishing tiedown procedures that exceed normal field practices.

**5.2 Rail Transportation.**

**5.2.1 General.** Items developed for movement by the rail mode should meet the limitation imposed by physical, legal, and administrative characteristics of rail lines worldwide. This document presents the most significant constraints of North American and foreign rail systems. These criteria establish guidelines to ensure that new military equipment requiring rail transport is compatible with the capabilities and limitations of North American and foreign rail systems.

**5.2.2 North American rail.**

**5.2.2.1 Railcar availability.** The dimensions of typical North American railcars used by the DOD are shown in table 1 (page 18). A description of cars, including numbers and types of carsavailable in North America, is given in *The Official Railway Equipment Register.* The information in this register is for railcars listed in the Universal Machine Language Equipmenrailcars not listed in the UMLER files for interchange from one rail line to another. Normally, transportability problem items will require movement on open-top railcars. New items of equipment shall be designed such that they will fit on at least one type of the flatcars listed in table 1 (page 18), when rail transport is a requirement.

**5.2.2.2 Unrestricted transport.** For generally unrestricted movement in North America, the height and width of a loaded railcar shall remain within the limitations of the AAR outline Diagram for Single Loads, Without End Overhang, on Open-Top Cars (AAR diagram) (see figure 1 on page 20). A loaded railcar meeting the confines of this diagram will be capable of unrestricted transport in North America except on a very few rail lines generally considered unimportant for DOD use. Loads wider than the flatcar, or combined load plus flatcar heights greater than 15 feet 1 inch (4597 mm) above the top of the rails, are considered "dimensional loads." All involved railroad companies will perform clearance checks on "dimensional loads" for the entire distance of shipment before such shipments will be accepted. Clearance checks may delay rail transport because they are performed during normal working hours. When a load overhangs the sides of a railcar, the width is measured as two times the largest distance from the railcar centerline to outside edge of load. For clearance purposes, this distance is the least critical when the load is centered on the flatcar centerline. Usually a plus/minus 1-inch (25 mm) tolerance is sufficient for item placement. When railcars are requested from a railroad company on short notice, the railroad company will furnish what is readily available. Deck heights of flatcars can vary. For these reasons, unrestricted rail transport is based on a "standard deck height" railcar. Based on the deck heights of railcars listed in *The Official Railway Equipment Register*, the "standard deck height" is 50 inches (4.17 ft, 1270 mm) above the top of rails. When unrestricted North American rail transport is a requirement, new items of equipment shall be designed such that the item outline is within the AAR diagram (see figure 1 on page 20) when placed on a 50-inch-high flatcar.

**5.2.2.3 CONUS transport for equipment exceeding the AAR diagram.** For large equipment that cannot meet the AAR diagram, a special DOD rail clearance diagram has been developed (see figure 2 on page 21). Meeting the DOD diagram assures strategic transport over rail lines considered important to the national defense, but administrative delays are possible due to checking of clearances. When meeting the DOD diagram is a requirement, new items of equipment shall be designed such that the item outline is within the DOD diagram when placed on a 50-inch-high (4.17 ft, 1270 mm) flatcar.

**5.2.2.4 Typical vehicle loading on flatcars.** Figure 3 (page 22) and figure 4 (page 22) show typical loading of vehicles on flatcars

**TABLE 1. Typical railcar characteristics .**

| Type Railcar and Designation if any [1] | Typical Deck Dimensions Length by Width (ft, mm, in) | Typical [2] Load Limit (lb, kg) | Typical deck height above top of rail (ft, mm, in) | Approximate Number Available [3] | Notes |
|---|---|---|---|---|---|
| Flatcars ITTX and similar | 89 by 8.5<br>27 127 by 2591<br>1068 by 102 | 140,000<br>63 500 | 3.50<br>1067<br>42 | 1000 [4] | 4-axle, cushioned draft gear flatcar equipped with 3/8-in. chains. Chains have working load limit of 9,000 lb. Also equipped with special adjustable and foldaway pedestals. |
| Flatcars TTDX and similar | 89 by 8.5<br>27 127 by 2591<br>1068 by 102 | 140,000<br>63 500 | 3.50<br>1067<br>42 | 300 | 4-axle, cushioned draft gear flatcar equipped with 1/2-in. chains. Chains have working load limit of 13,750 lb and are proof tested to 27,500 lb. |
| Flatcars OTTX and similar | 60 by 10.5<br>18 288 by 3200<br>720 by 126 | 144,000<br>65 300 | 3.75<br>1143<br>45 | 1,800 [4]<br>(1,211) | 4-axle, cushioned draft gear flatcar equipped with 3/8-in. chains. Chains have working load limit of 9,000 lb. |
| Flatcars HTTX and similar | 60 by 10.5<br>18 288 by 3200<br>720 by 126 | 146,000<br>66 200 | 3.75<br>1143<br>45 | 900 [4]<br>(784) | 4-axle cushioned draft gear flatcar equipped with heavy-duty tiedowns. Equipped with 1/2-in. chains with working load limit of 13,750 lb. |
| Flatcars MTTX and similar | 60 by 10.5<br>18 288 by 3200<br>720 by 126 | 148,000<br>67 100 | 3.50<br>1067<br>42 | 950 [4] | 4-axle, basic multipurpose cushioned draft gear flatcar with plain wood deck but no chains. |
| Flatcars DODX 40000-series | 68 by 10.4<br>20 726 by 3175<br>816 by 125 | 298,000<br>135 200<br>(140-ton nominal capacity) | 14.08<br>1245<br>49 | 566 | Heavy duty, 6-axle, cushioned draft gear flatcar with 1/2-in. chains. |
| Flatcars DODX 41000-series | 68 by 10.5<br>20 726 by 3200<br>816 by 126 | 180,000<br>81 600 | 4.17<br>1270<br>50 | 256 | 4-axle, steel-deck, cushioned draft gear flatcar equipped with 1/2-in. chains with working load limit of 13,750 lb and lift-up container pedestals. |
| Flatcar DODX 42000-series | 89 by 9.5<br>27 127 by 2896<br>1068 by 114 | 164,000<br>74 400 | 4.25<br>1295<br>51 | 334 | 4-axle, steel-deck, cushioned draft gear flatcar equipped with 1/2-in. chains with working load limit of 13,750 lb and lift-up container pedestals. |

**TABLE 1. Typical railcar characteristics - Continued.**

| Type Railcar and Designation if any [1] | Typical Deck Dimensions Length by Width (ft, mm, in) | Typical [2] Load Limit (lb, kg) | Typical deck height above top of rail (ft, mm, in) | Approximate Number Available [3] | Notes |
|---|---|---|---|---|---|
| Flatcars, Others (cushioned and standard draft gear) | 89.3 by 8.5 to<br>51.3 by 10.0<br>27 228 by 2591 to<br>15 645 by 3200<br>1072 by 102 to<br>616 by 126 | 100,000 to<br>140,000<br>45 400 to 63 500 | 4.17<br>1270<br>50 | widely available [5] | Flatcars may have standard or cushioned draft gear. |
| Boxcars | 50.5 by 9.6 to<br>86.5 by 9.2<br>15 392 by 2920 to<br>26 365 by 2896<br>606 by 115 to<br>630 by 114 | 100,000 to<br>160,000<br>45 400 to 72 600 | 4.17<br>1270<br>50 | widely available [5] | Boxcars may have standard or cushioned draft gear. |
| Gondolas | 46.0 by 9.6 to<br>52.5 by 9.5<br>14 021 by 2920 to<br>16 002 by 2896<br>552 by 115 to<br>630 by 114 | 140,000 to<br>200,000<br>63 500 to 90 700 | 4.17<br>1270<br>50 | widely available [5] | Gondolas may have standard or cushioned draft gear. |
| COFC (Container on flatcar railcars) | Suitable for 20-foot and 40-foot ISO containers | Limited by container | Variable | 32,660 | Of these, 12,872 are double stack cars typically used in special service not available in all areas. |
| TOFC (Trailer on flatcar railcars | Suitable for semi-trailers up to:<br>53 ft<br>16 150 mm<br>636 in<br>long | 140,000<br>63 503 | 3.75<br>1143<br>45 | Widely available [5] | Suitable only for semitrailers with 2-inch (50.8 mm) king pins. Many are only suitable for 102-inch (2590.8 mm) wide semitrailers. |

[1] See the definition of “reporting marks” in section 3 for an explanation of flatcar designations.

[2] See section 3 for definition of load limit. The ability of general service flatcars (excluding 84- and 89-foot flatcars) to carry a single heavy vehicle is usually limited to 75% of the load limit, depending on length of the vehicle and design of the flatcar. Gondolas and boxcars have similar restrictions. The 84- and 89-foot flatcars cannot carry concentrated loads. They are generally used to carry multiple light items.

[3] Data source - *The Official Railway Equipment Register*, RER Publishing Corporation, Oct 97.

[4] For the ITTX, HTTX, OTTX and MTTX flatcars, the number given denotes the total number of flatcars that have that or a similar designation. The number in parentheses for the HTTX, OTTX and MTTX denotes the number of flatcars that meet Note 3 in the Trailer Train Company section of the *The Official Railway Equipment Register.* Note 3 states, “These 60-ft flatcars are capable of carrying 90% of the load limit over a centered 14 ft.” This means these railcars can transport tanks weighing up to about 64.8 tons (58 786 kg).

[5] The term “widely available” means that railcars of this type are abundant; however, a specific car may not be readily available.

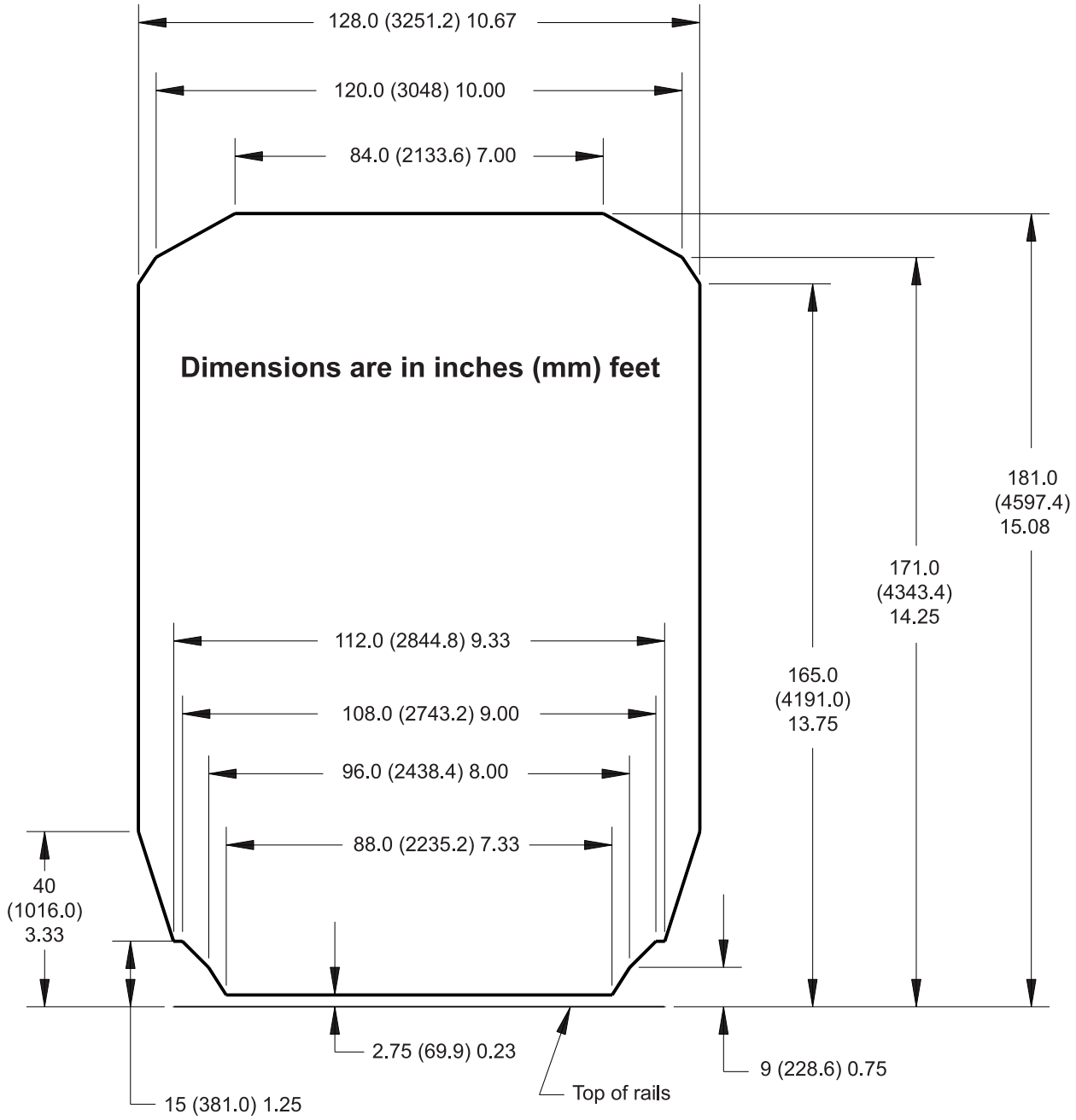


**FIGURE 1. AAR outline diagram of single loads, without end overhang, on open-top cars (AAR diagram).**

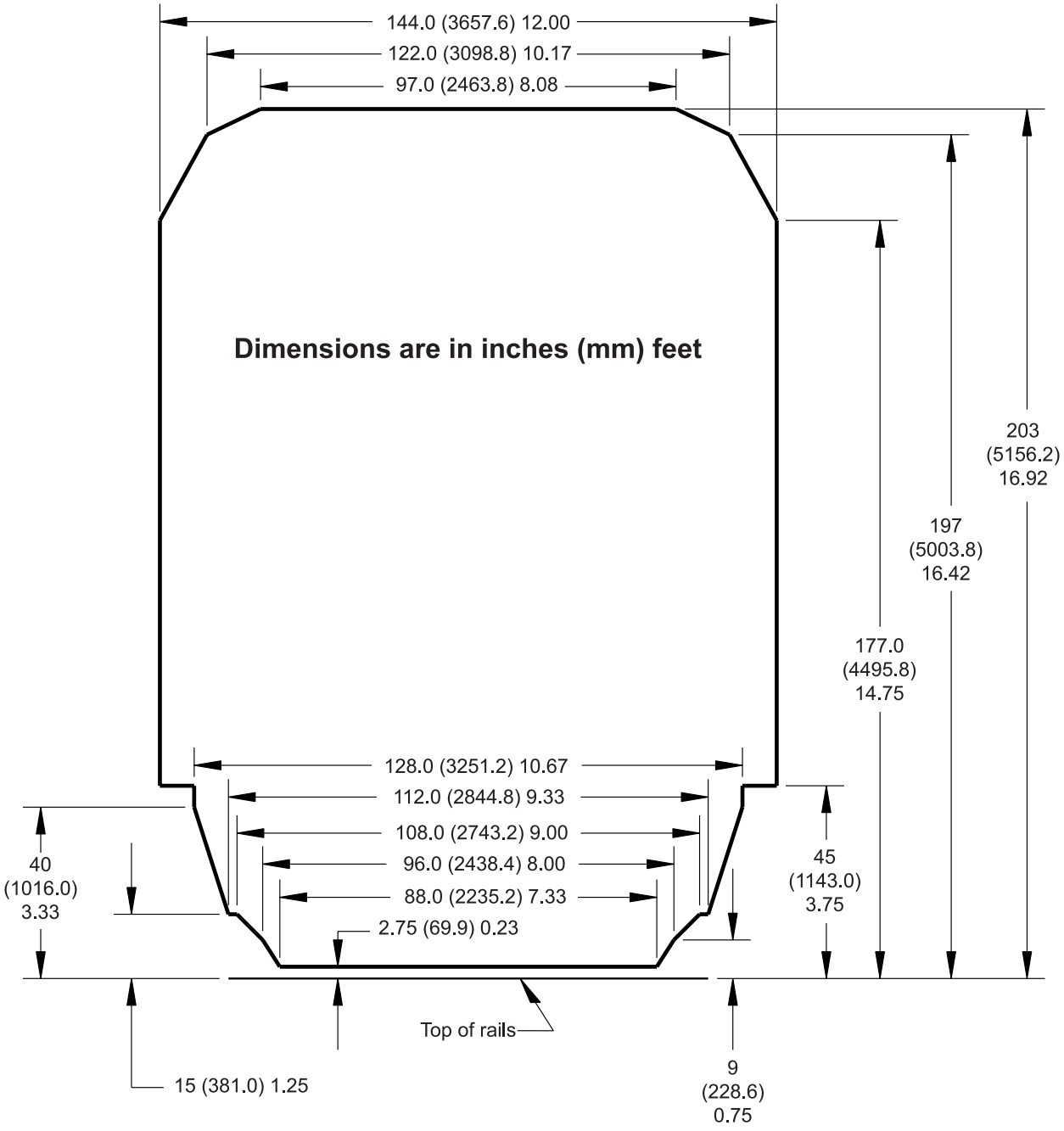


**FIGURE 2. DOD rail clearance diagram.**

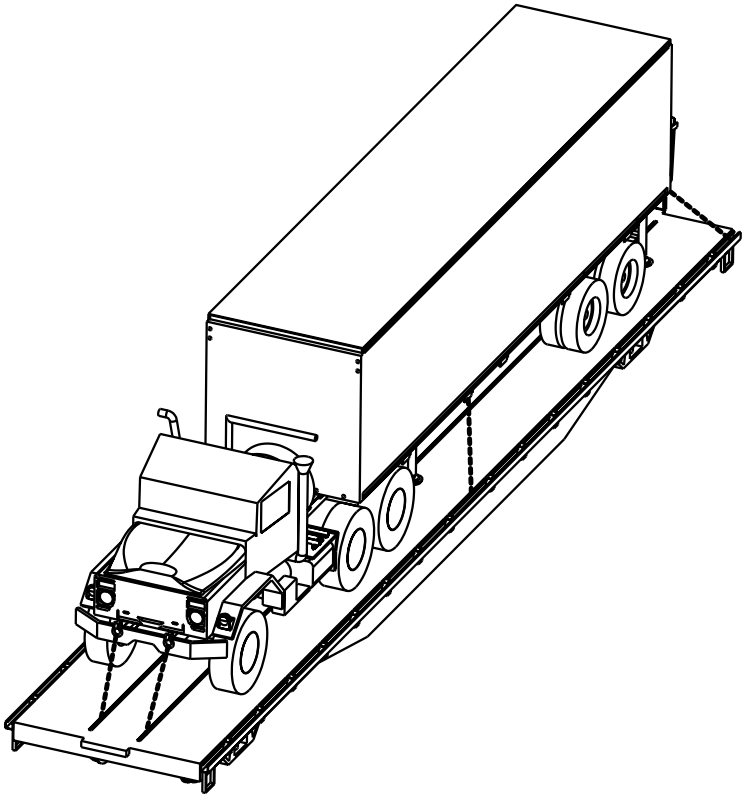

**FIGURE 3. Typical vehicle loading on HTTX flatcar (the OTTX is similar).**

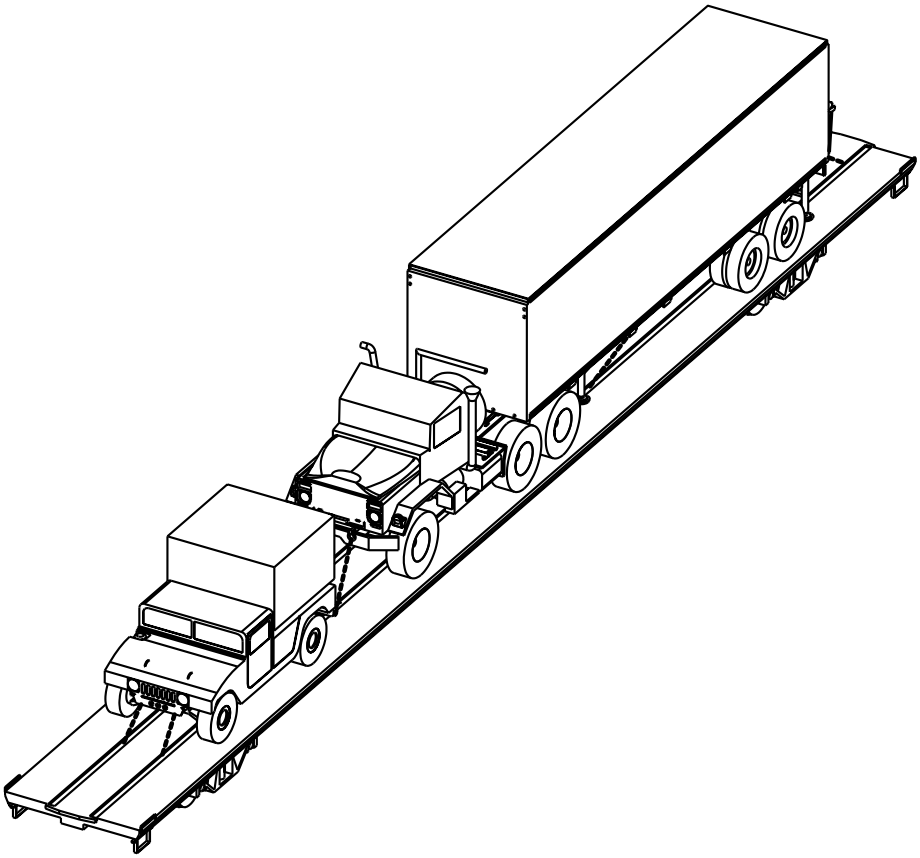

**FIGURE 4. Typical vehicle loading on TTDX flatcar (the ITTX is similar).**

**5.2.3 Foreign rail.**

**5.2.3.1 NATO railcar availability.** The railcars listed in table 2 (page 24) represent those available for military transport in NATO countries. The types and availability of railcars in other foreign countries vary from country to country. Items of equipment shall be designed to fit on the flatcars listed in table 2 (page 24), when rail transport in NATO countries is a requirement.

**5.2.3.2 NATO rail.** When unrestricted foreign rail transport is a requirement, the item of equipment shall be designed to meet requirements (1) through (5) in the definition of ordinary transport military equipment (see 5.2.3.2a) when placed on a 1305 mm (4.28 ft, 51.4 in.) high flatcar. Standardization Agreement (STANAG) 2175 defines two types of equipment - ordinary transport military equipment and exceptional transport military equipment. This is based on the Rs flatcar. Table 2 (page 24) shows that the worst case for European rail transport is the Rs flatcar.

**a. Ordinary transport military equipment.** Ordinary transport military equipment consists of wheeled vehicles, tracked vehicles, and equipment that presents all the following characteristics:

(1) Indivisible weight not exceeding 20 000 kg (44,092 lb).

(2) Length not exceeding 12 500 mm (41.01 ft, 492.1 in.).

(3) Load distribution: 16 500 kg (36,376 lb) maximum over a length of 25 000 mm (8.20 ft, 98.4 in.).

(4) Require no lowering of the carrying flatcar's dropsides.

(5) The flatcar/equipment unit conforms to the Gabarit International de Chargement (GIC), with a loading tolerance of 15 mm (0.59 in.) per half-width. The 15 mm (0.59 in.) per half-width tolerance allows for some error in the placement of an item on a railcar. In other words, the equipment must be within the GIC by at least 15 mm (0.59 in.) measured horizontally.

**b. Exceptional transport military equipment.** Exceptional transport military equipment consists of wheeled vehicles, tracked vehicles, and equipment that present at least one of the following characteristics:

(1) Indivisible weight over 20 000 kg (44,092 lb).

(2) Length over 12 500 mm (41.01 ft, 492.1 in.).

(3) Load distribution: more than 16 500 kg (36,376 lb) over a length of 25 000 mm (8.20 ft, 98.4 in.).

(4) Require lowering of flatcar's drop-sides. (see table 2 on page 24)

**TABLE 2. Characteristics of Deutsche Bundesbahn (DB) flatcars .**

| Designation of flatcars | Description of flatcars | Typical Deck Dimensions Length by Width (mm, ft, in) | Deck Height above top of rail (mm, ft, in.) | Typical Load Limit (kg, lb) | Approximate Number Available |
|---|---|---|---|---|---|
| Ks | Light duty flatcar, 2-axle, with removable side and end walls | 12 500 by 2770<br>41.0 by 9.1<br>492 by 109 | 1238<br>4.06<br>48.7 | 27 000<br>59,500 | 23,000 |
| Rs | Heavy duty flat-car, 4-axle | 18 500 by 2770<br>60.7 by 9.1<br>728 by 109 | 1305<br>4.28<br>51.4 | 50 500<br>111,300 | 8,500 |
| Res | Heavy duty flat-car, 4-axle, with removable side walls | 18 500 by 2770<br>60.7 by 9.1 [1/]<br>728 by 109 | 1238<br>4.06<br>48.7 | 55 000<br>121,250 | 4,900 |
| Rmms | Heavy duty flat-car, 4-axle, length is less than 15m | 12 644 by 2904<br>41.5 by 9.5<br>498 by 114.3 | 1260<br>4.13<br>49.6 | 57 500<br>126,760 | 3,000 |
| Remms | Heavy duty flat-car, 4-axle, with removable side walls | 12 644 by 2904<br>41.5 by 9.5 [1]<br>498 by 114.3 | 1260<br>4.13<br>49.6 | 58 500<br>128,900 | 660 |
| Rlmmps | Heavy duty flat-car, equipped with stakes, 4-axle, does not have bulkhead | 8800 by 3150<br>28.9 by 10.3<br>346.5 by 124.0 [1] | 1291<br>4.24<br>50.8 | 54 000<br>119,050 | 830 |
| Samms | Heavy duty flat-car, 6-axle, length is less than 15m | 15 000 by 3110<br>49.2 by 10.2 591<br>by 122 [1] | 1300<br>4.27<br>51.2 | 65 000<br>143,300 | 5,600 |

[1] The Res, Remms and Samms flatcars have dropsides. The widths shown are the actual widths of these flatcars. For unrestricted rail transport, the designer should use 8.69 (2649 mm, 104 in.), 9.1 (2774 mm, 109 in.) and 8.39 feet (2557 mm, 101 in.) as the maximum item/system width for the Res, Remms and Samms flatcars respectively.

(5) The flatcar/equipment unit is not in conformity with (exceeds) the GIC diagram (see figure 5 on page 26). The GIC diagram does not include the 15 mm (0.59 in.) per half-width tolerance.

**c. Military equipment not ordinary or exceptional for transport.** Items that have dimensions that exceed the ordinary transport criteria but do not exceed the GIC diagram (see figure 5 on page 26) are not classified as either ordinary or exceptional transport. These items must be centered on the flatcar longitudinal centerline to avoid an exceptional transport military equipment classification.

**5.2.3.3 NATO rail transport on major rail lines.** Items of equipment that do not meet GIC diagram clearances may still be transported on the major NATO rail lines provided they meet envelope B (see figure 6 on page 27). When transport on major NATO rail lines is a requirement, the item of equipment shall be designed to be within the envelope B gauge when placed on a 1305 mm (4.28 ft, 51.4 in.) high flatcar.

**5.2.3.4 Other foreign rail clearances.** Rail transport clearances in foreign countries other than NATO will vary from country to country. Information on Korean flatcars is listed in table 3 (page 25) and the Korean rail clearance diagram is shown in figure 7 (page 28). For simplicity, when unrestricted foreign rail transport in countries other than NATO and Korea is a requirement, the item shall meet the requirements of paragraph 5.2.3.2 (page 23).

**TABLE 3. Korean flatcar characteristics .**

| Designation of Flatcars | Description of Flatcars | Typical Deck Dimensions Length by Width (m, ft, in) | Deck Height above top of rail (m, ft, in) | Typical Load Limit (kg, lb) | Approx. number available |
|---|---|---|---|---|---|
| 50T | 6-axle | 15.0 by 2.9<br>49.21 by 9.51<br>590.6 by 114.2 | 1.2<br>3.94<br>47.2 | 49 986<br>110,200 | 393 |
| 70T | 6-axle | 15.3 by 3.5<br>50.20 by 11.48<br>602.4 by 137.8 | 1.4<br>4.59<br>55.1 | 69 853<br>154,000 | 60 |

**5.2.4 Comparison of loading diagrams.** When the various loading diagrams are superimposed (see figure 8 on page 29), it becomes clear that meeting one diagram does not insure meeting others.

**5.2.5 Rail impact testing.** Rail transport subjects items of equipment to severe longitudinal forces. Therefore, items of equipment may need to undergo testing to determine suitability for rail transport. The MIL-STD-810 rail impact test is used to validate the structural integrity of the item and the adequacy of the item tiedown provisions and procedures. Any item that passes the MIL-STD-810 test should be capable of rail transport without damage to the item or tiedowns.

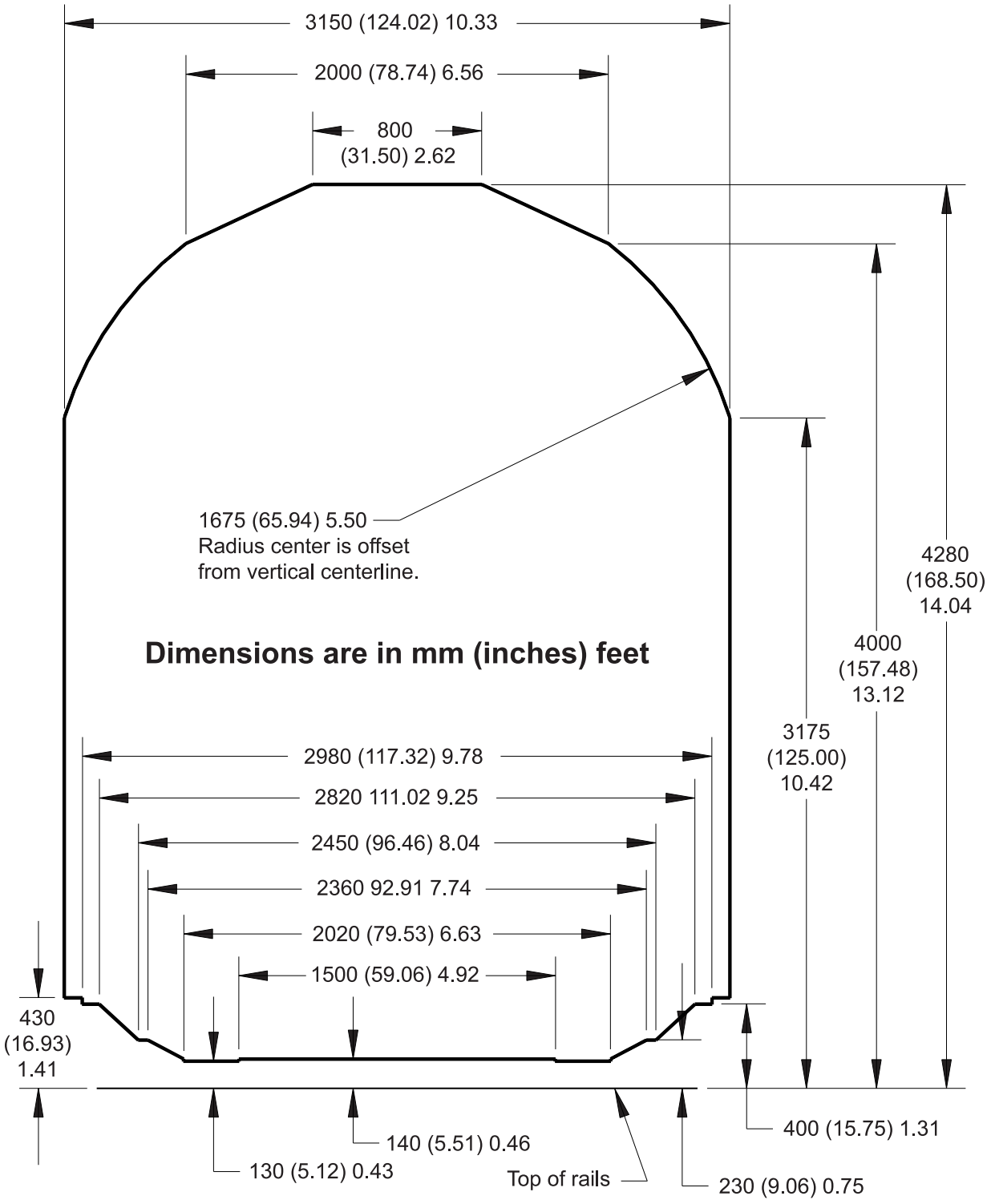


**FIGURE 5. GIC diagram.**

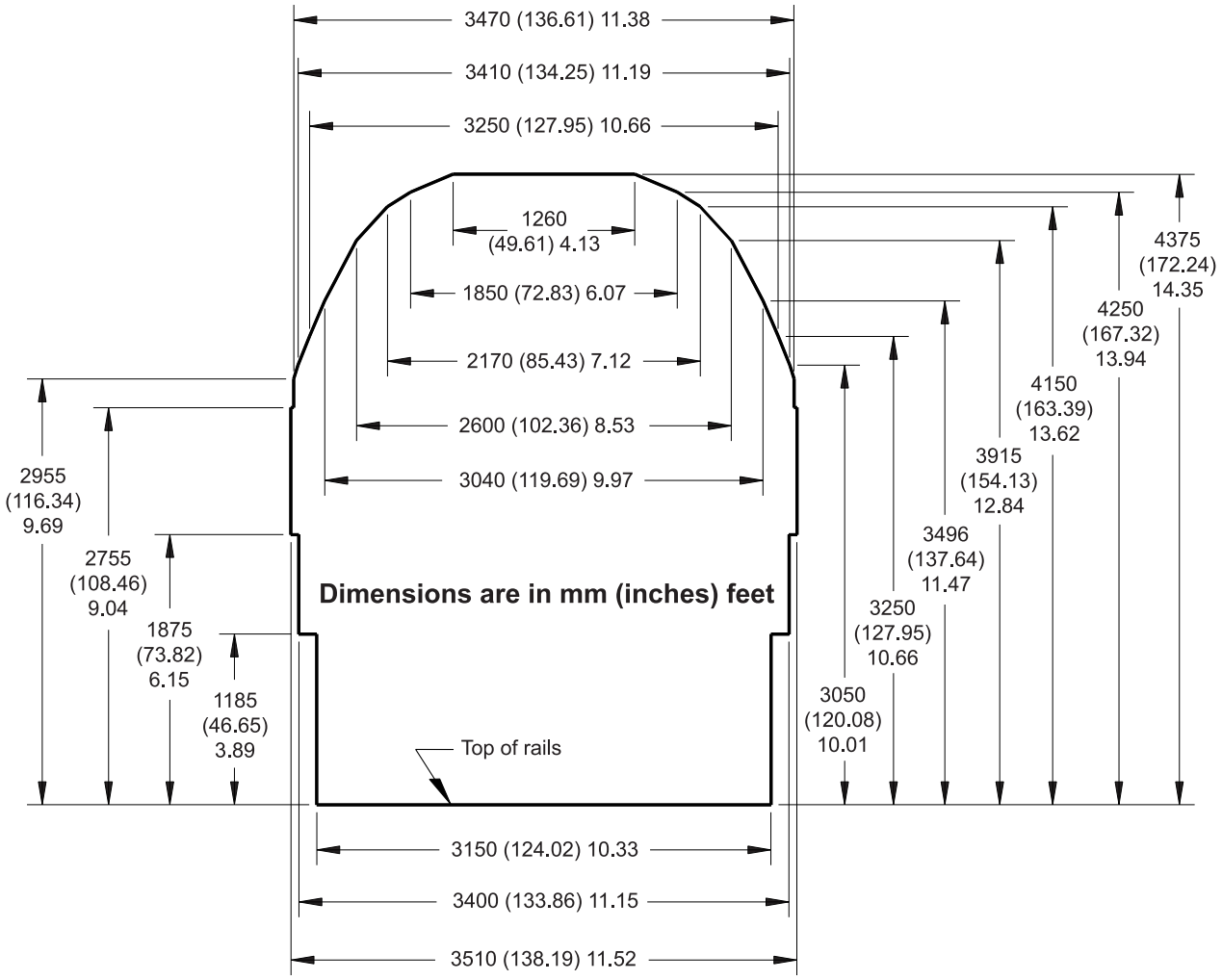


**FIGURE 6. NATO Envelope B.**

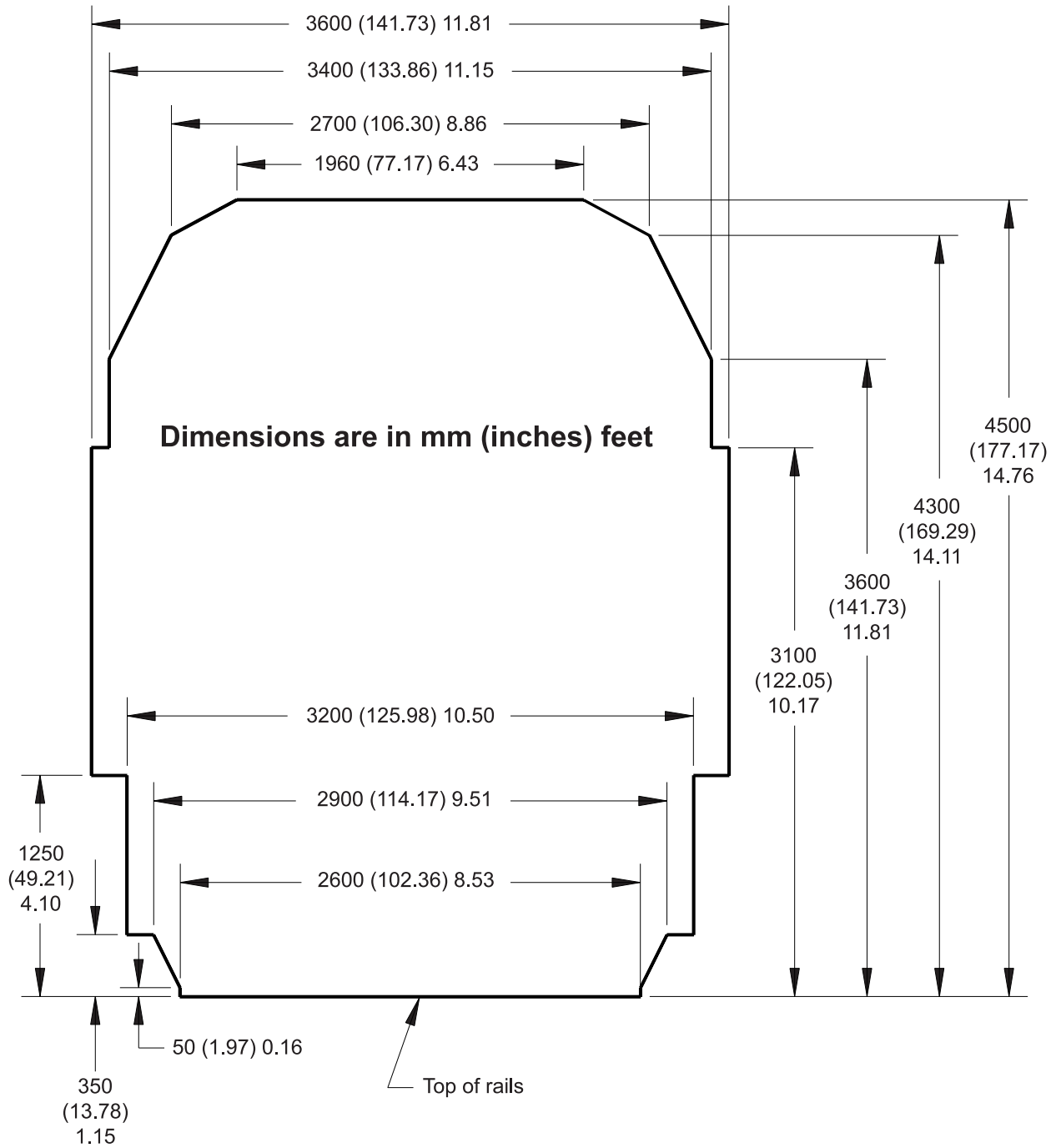


**FIGURE 7. Korean rail clearance diagram.**

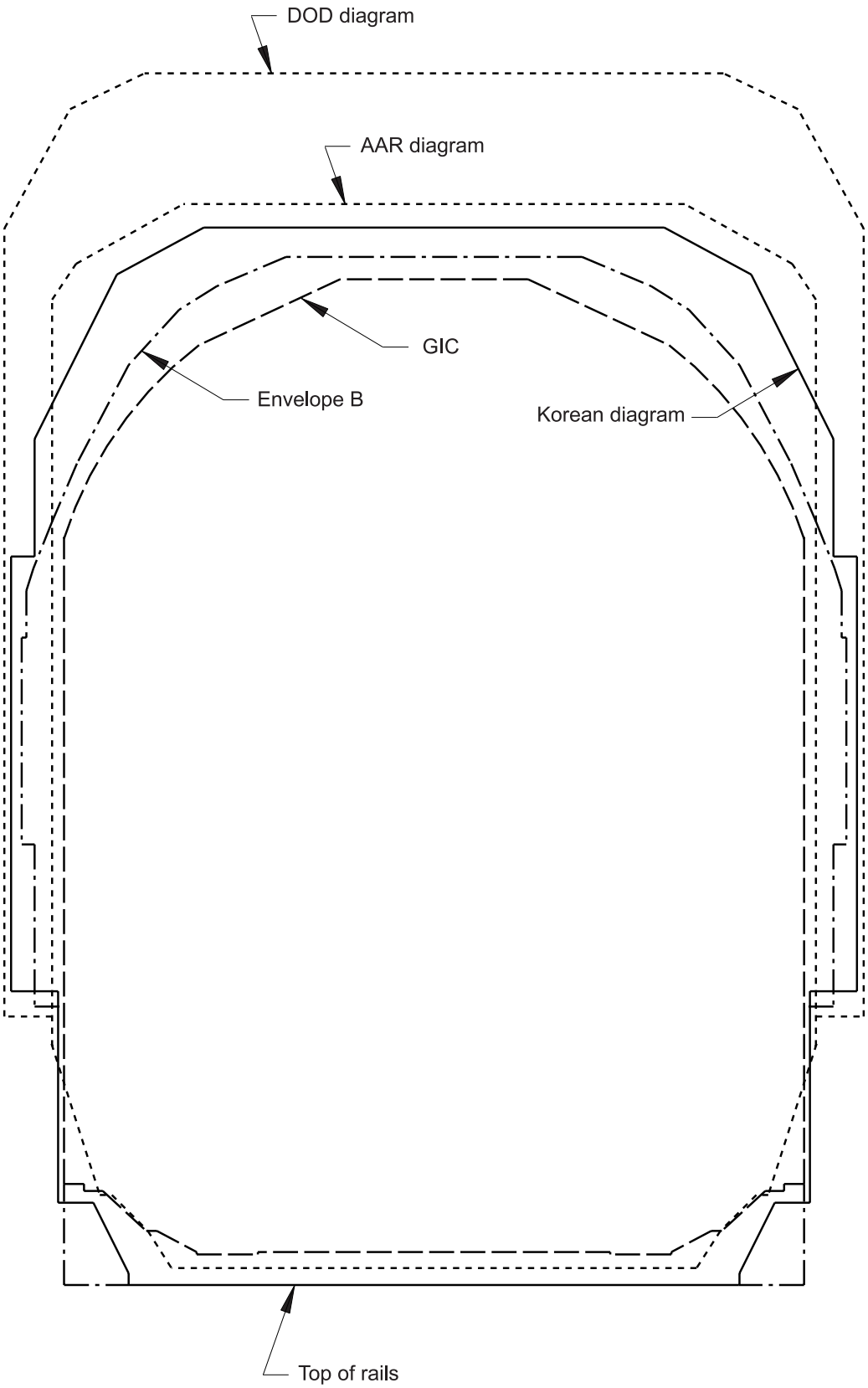


**FIGURE 8. Comparison of loading diagrams.**

**5.2.6 Modeling and simulation for rail.** For rail transport, 3D modeling supports development of procedures for loading and securing to common militarily useful flatcars. It is further used to determine if the equipment meets rail clearance diagrams. Structural analysis is useful to determine component stress under loads typically experienced during rail transport. MTMCTEA's rail impact test simulation provides impact loads that are experienced in the MIL-STD-810 rail impact test.

**5.3 Water Transportation.**

**5.3.1 General.** Water transport is used for both strategic and tactical deployments. During strategic deployment, the majority of U.S. Army equipment will be transported by ship. Marine Corps equipment belonging to the assault follow-on-echelon (AFOE) will be transported by strategic sealift ships. Most of the dry cargo vessels available for the shipment of military cargo and used in military exercises are under the control of the Maritime Administration (MARAD) or Military Sealift Command (MSC). MARAD is responsible for the National Defense Reserve Fleet (NDRF) and the Ready Reserve Fleet (RRF). The NDRF contains 116 dry cargo ships, 78 of which comprise the RRF. The RRF maintains ships in a heightened state of readiness with the capability to deploy in 4, 5, 10, 20, or 30 days. MSC administers the Fast sealift ships (FSS), Large Medium Speed Roll-on/roll-off (LMSR) ships, and the Afloat pre-positioning force (APF). The APF consists of 11 ships prepositioned with Army equipment as part of the Army Prepositioned Stocks (APS) program and 13 Maritime Prepositioning Ships (MPS), which are prepositioned with Marine Corps equipment. The MPS and APS ships are available for common use after initial discharge and release by the theater commander. The U.S. commercial dry cargo fleet consists of four conventional ship types: breakbulk, container, barge carriers, and roll on/roll off (RO/RO). Various combinations of these four ship types also exist. For example, combination container/breakbulk, container/RO/RO, and container/barge vessels are in service.

**5.3.2 Breakbulk general-cargo ships.** The hold configuration on most breakbulk ships is generally the same, consisting of five to seven holds. Each hold has three to five decks and hatch covers that allow access to the different decks. Cargo operations on breakbulk vessels are lift on/ lift off (LO/LO). Each hold on a breakbulk vessel is served by ship's gear and can be served by pier-side cranes. Table 4 (page 31) gives dimensional and weight capability data for two representative classes of breakbulk vessels.

**5.3.3 Containerships.**

**5.3.3.1 General.** Modern containerships (including combination ships) are designed to carry all or part of their cargo load in containers/flatracks (20 (6.1 m) or 40 foot (12.2 m) long). The containership allows containers to be secured without use of dunnage. Containerships also have the capability for transporting containers that are stacked on the hatch covers. SEM is transportable on containerships within containers, on flatracks, or on the hatch covers.

**TABLE 4. Deck and hatch characteristics of typical breakbulk vessels .**

| MARAD Design | Hold No. | Hatch Opening Length by Width (ft, m) [1] | Height in Hold Minimum to Maximum (ft, m) [2] | Allowable Deck Load Minimum to Maximum (lb per ft$^2$, kPa) | Boom Lift Capacity (LTON, lb, kg) |
|---|---|---|---|---|---|
| Cape C Class (6 ships) | 1 | 31’ 3 “ by 17’ 10"<br>9.53 by 5.44 | 8’ 8" to 10’ 7"<br>2.64 to 3.23 | 495 to 1,790<br>30.0 to 85.5 | 15, 33,600, 15 000 |
| | 2 | 39’ 9" by 24’ 10"<br>12.11 by 7.57 | 8’ 9" to 10’ 7"<br>2.67 to 3.23 | 468 to 2,060<br>22.4 to 98.6 | 10 and 60<br>22,400 and 134,400<br>10 000 and 60 000 |
| | 3 | 34’ 9" by 24’ 10"<br>10.59 by 7.57 | 8’ 8" to 13’ 1"<br>2.64 to 3.99 | 452 to 2,060<br>21.6 to 98.6 | 15, 33,600, 15 000 |
| | 4 | 34’ 9" by 24’ 10"<br>10.59 by 7.57 | 8’ 6" to 13’ 0"<br>2.59 to 3.96 | 452 to 2,060<br>21.6 to 98.6 | 15, 33,600, 15 000 |
| | 5 | 29’ 9" by 24’ 10"<br>9.07 by 7.57 | 9’ 6" to 15’ 10"<br>2.90 to 4.83 | 452 to 1,360<br>21.6 to 64.8 | 10, 22,400, 10 000 |
| Pioneer Cmdr (+ 2 sister ships) | 1 | 27’ 0" by 16’ 0"<br>8.23 by 4.88 | 7’ 10" to 13’ 2"<br>2.39 to 4.01 | 400 to 1,000<br>19.3 to 47.6 | 10, 22,400, 10 000 |
| | 2 | 42’ 6" by 23’ 0"<br>12.95 by 7.01 | 10’ 3" to 12’ 2"<br>3.12 to 3.71 | 495 to 1,865<br>30.0 to 89.3 | 10 and 15<br>22,400 and 33,600<br>10 000 and 15 000 |
| | 3 | 42’ 6" by 16’ 0"<br>12.95 by 4.88 | 8’ 7" to 14’ 10"<br>2.62 to 4.52 | 430 to 1,740<br>20.6 to 83.4 | 10, 15, and 70<br>22,400, 33,600 and 156,800<br>10 000, 15 000 and 70 000 |
| | 4 | 42’ 6" by 16’ 0"<br>12.95 by 4.88 | 7’ 11" to<br>14’ 10"<br>24.13 to 45.21 | 390 to 1,740<br>18.7 to 82.3 | 10, 15, and 60<br>22,400, 33,600 and 134,400<br>10 000, 15 000 and 60 000 |
| | 5 | 35’ 0" by 23’ 0"<br>10.69 by 7.01 | 8’ 3" to 12’ 11"<br>25.15 to 39.37 | 380 to 1,630<br>18.2 to 78.1 | 10 and 15<br>22,400 and 33,600<br>10 000 and15 000 |
| | 6 | 35’ 0" by 23’ 0"<br>10.69 by 7.01 | 7’ 9" to 8’ 8"<br>23.11 to 26.42 | 390 to 1,260<br>18.7 to 60.3 | 10, 22,400, 10 000 |

[1] Values given are actual dimensions. For design purposes, subtract 12" (.3 m) from the listed values to ensure adequate clearance.
[2] Values given are actual dimensions. For design purposes, subtract 6" (.15 m) from the listed values to ensure adequate clearance. The higher values are directly under the hatches.

**5.3.3.2 Full containerships.** These vessels carry containers/flatracks as their normal, full cargo load and have little or no capability for carrying other types of cargo except for cargo placed on the hatch covers. This is inefficient since many stacked containers are displaced for each item of equipment. All modern, full containerships are nonself-sustaining. Shoreside container gantry cranes, mobile cranes, or floating derrick cranes are required for cargo operations. Cargo dimensions are dictated by the characteristics of the container(s)/flatrack(s) used (see 5.8 on page 78).

**5.3.4 Combination ships.** A great number of combination containerships are currently in service. These vessels are usually smaller than full containerships and are generally self-sustaining. In many cases, the combination containership is a modified breakbulk or RO/RO vessel. Table 5 (page 33) provides the characteristics for carrying breakbulk cargo on combination ships.

**5.3.5 Barge Carriers.**

**5.3.5.1 General.** The Lighter Aboard Ship (LASH) and Sea Barge (SEABEE) transportation systems operate similar to a containership. In these systems, cargo is stowed in unitized lighters or barges. The barges or lighters are then stowed aboard a barge carrier or mother ship. One major difference between containerships and barge carriers is the amount of cargo that lighters or barges can handle. LASH lighters and SEABEE barges have cubic capacities of 20,000 $ft^3$ (15 080 $m^3$) and 40,000 $ft^3$ (30 160 $m^3$), respectively. The LASH system uses a gantry crane to load its lighters, while the SEABEE system has an elevator to load its barges.

**5.3.5.2 LASH.** The LASH system consists of a fleet of lighters and a lighter-carrying vessel or mother ship capable of transporting 46 to 89 lighters. The lighters are handled by a 446-LTON (999,040 lb, 404 605 kg), rail-mounted, gantry crane, which can travel the entire length of the cargo area. During a typical loading cycle, lighters are lifted over the transom stern by the gantry crane. The gantry crane then travels forward, stacking the lighters in deep hold cells, athwartship.

**5.3.5.3 LASH Lighters.** Figure 9 (page 34) and figure 10 (page 35) show specific lighter characteristics. The interior of the lighter is fitted with two levels of tiedowns. The first level consists of five tiedowns per side and four per end and are located 2 feet 6 inches (.76 m) above the deck. The second level has the same number of tiedowns as the first level, located 8 feet (2.44 m) above the deck. Each LASH lighter has a 370 LTON (828,800 lb, 370 000 kg) capacity.

**5.3.5.4 SEABEE.** The SEABEE system operates similarly to the LASH system. Barge stowage is configured for deck loading. Barges are stowed and discharged by a stern-mounted, submersible 2,400-LTON (5,376,000 lb, 2 400 000 kg) ship's elevator. Barges are transferred from the elevator platform on one of the three decks for stowage by two large transporters. Each SEABEE carrier has a capacity of 38 barges; however, only 24 barges are currently available per vessel. In addition, the SEABEE ship can carry logistics-over-the-shore lighterage on its weather deck.

**TABLE 5. Deck and hatch characteristics of a typical combination vessel .**

| MARAD Design Cape Nome Hold No. | Hatch Opening Length by Width (ft, m) [1] | Height in Hold Minimum to Maximum (ft, m) [2] | Allowable Deck Load Minimum to Maximum (lb per ft$^2$, kPa) | Boom Lift Capacity (LTON, lb, kg) |
|---|---|---|---|---|
| 1 | 42’ 11" by 8’ 10"<br>13.08 by 2.69<br>(port and starboard)<br>41’ 11" by 17’ 3"<br>12.78 by 5.26<br>(center) | 15’ 11" to<br>22’ 6"<br>4.85 to 6.86 | 300 to 810<br>14.36 to 38.78 | 5<br>11,200<br>5000 |
| 2 | 41’ 11" by 17’ 11"<br>12.78 by 5.46<br>(port and starboard) 41’ 11" by 17’ 3"<br>12.78 by 5.26<br>(center) | 16’ 0" to<br>22’ 6"<br>4.88 to 6.86 | 340 to 810<br>16.28 to 38.78 | 30<br>67,200<br>30 000 |
| 3 | 41’ 11" by 25’ 8"<br>12.78 by 7.82<br>(port and starboard) 41’ 11" by 17’ 3"<br>12.78 by 5.26<br>(center) | 15’ 9" to<br>22’ 6"<br>4.80 to 6.86 | 650 to 2,450<br>31.12 to 117.31 | 30<br>67,200<br>30 000 |
| 4 | 41’ 11" by 25’ 8"<br>12.78 by 7.82<br>(port and starboard)<br>41’ 11" by 17’ 3"<br>12.78 by 5.26<br>(center) | 15’ 9" to<br>22’ 6"<br>4.80 to 6.86 | 650 to 2,450<br>31.12 to 117.31 | 30 and 70<br>67,200 and<br>156,800<br>30 000 and<br>70 000 |
| 5 | 41’ 11" by 25’ 8"<br>12.78 by 7.82<br>(port and starboard)<br>41’ 11" by 17’ 3"<br>12.78 by 5.26<br>(center) | 15’ 9" to<br>22’ 6"<br>4.80 to 6.86 | 650 to 2,450<br>31.12 to 117.31 | 30 and 70<br>67,200 and<br>156,800<br>30 000 and<br>70 000 |
| 6 | 41’ 11" by 25’ 8"<br>12.78 by 7.82<br>(port and starboard)<br>41’ 11" by 17’ 3"<br>12.78 by 5.26<br>(center) | 15’ 9" to<br>22’ 6"<br>4.80 to 6.86 | 650 to 2,450<br>31.12 to 117.31 | 30<br>67,200<br>30 000 |
| 7 | 41’ 11" by 25’ 8"<br>12.78 by 7.82<br>(port and starboard) | 16’ 9" to<br>22’ 6"<br>5.11 to 6.86 | 190 to 490<br>9.10 to 23.46 | 5<br>11,200<br>5000 |

[1] Values given are actual dimensions. For design purposes, subtract 12” (.3 m) from the listed values to ensure adequate clearance.

[2] Values given are actual dimensions. For design purposes, subtract 6” (.15 m) from the listed values to ensure adequate clearance. The higher values are directly under the hatches.

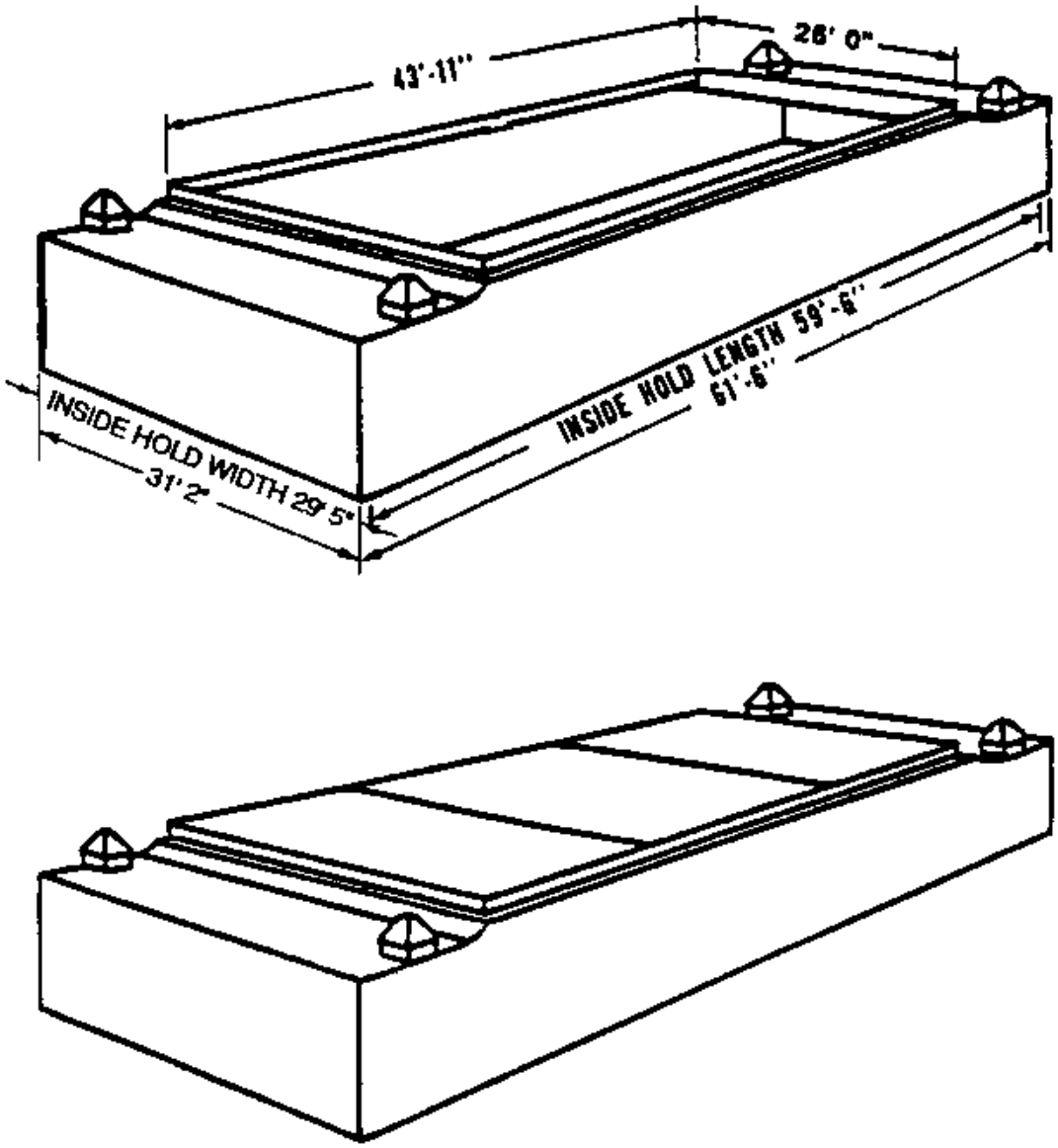


**Note:**
**Values are actual dimensions. For design purposes, subtract 12" from the hatch clearance values to ensure adequate clearance.**

**FIGURE 9. LASH lighter characteristics.**

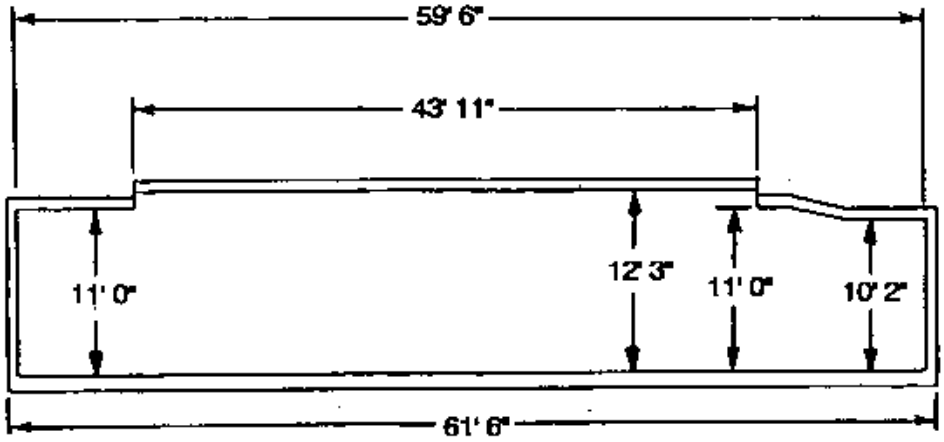


NOTE: VALUES GIVEN ARE ACTUAL DIMENSIONS. FOR DESIGN PURPOSES, SUBTRACT 6" FROM THE ACTUAL GIVEN HEIGHTS TO ENSURE ADEQUATE OVERHEAD CLEARANCE.

SIDE VIEW

**FIGURE 10. LASH Lighter Characteristics.**

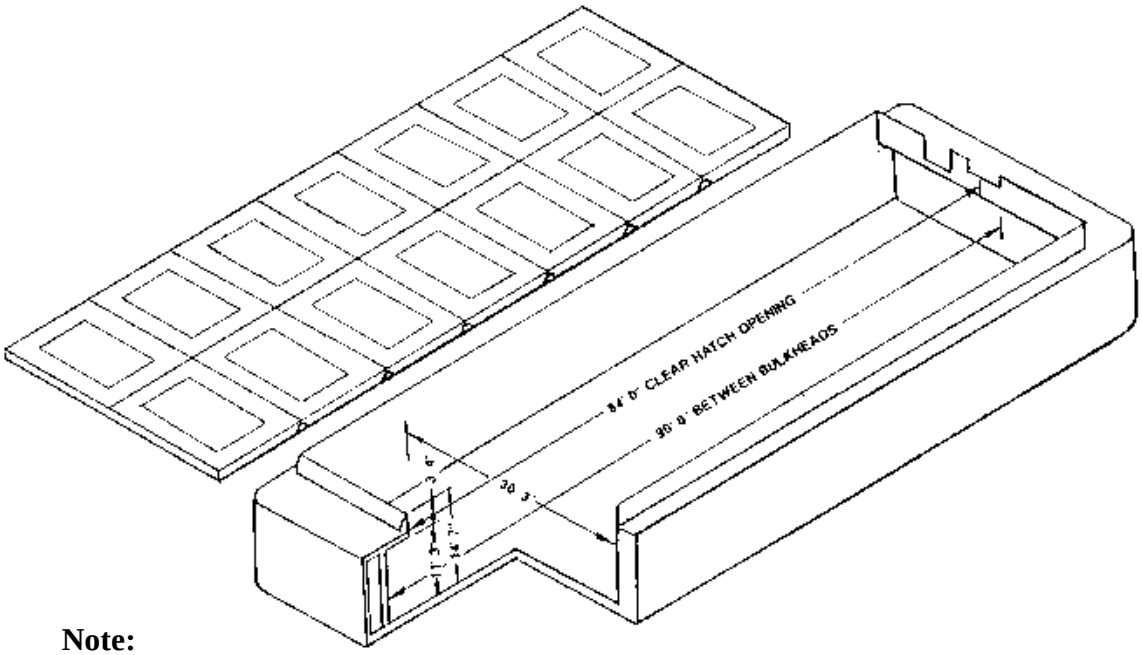


**Note:**
**Values given are actual dimensions. For design purposes, subtract 12" from clear hatch opening values, and 6" from height values to ensure adequate clearance.**

**FIGURE 11. SEABEE barge dimensional data.**

**5.3.5.5 SEABEE barges.** Figure 11 (page 35) presents the characteristics of a typical SEABEE barge. Each SEABEE barge has an 834 LTON (1,868,160 lb, 834 000 kg) capacity.

**5.3.6 Roll-on/roll-off (RORO) ships.**

**5.3.6.1 General.** The RO/RO ship is primarily a vehicle transporter that allows vehicles to drive on or off the ship via ramps. Some modern RO/RO vessels not only carry vehicles but also carry a combination of containers and/or breakbulk cargo. RO/RO cargo includes wheeled, tracked, self-propelled, and towed vehicles and equipment. A series of external and internal ramps facilitate the loading and discharge of RO/RO cargo. To maintain safe operations, the ramp angle for loading/unloading procedures is no greater than 15 degrees. When designing wheeled or tracked equipment, the materiel developer/contractor must allow for adequate clearance underneath the vehicle to prevent contact at the ramp crest/toe for a 15 degree ramp and enough clearance above the vehicle to prevent projection interference problems. Figure 12 (page 37) illustrates traffic flow while loading a typical RO/RO ship.

**5.3.6.2 Large medium speed roll-on/roll-off ships (LMSR).** The DOD Mobility Requirements Study (MRS), 22 April 1991, identified a shortfall of 2 million square feet (185 806 $m^2$) in prepositioned equipment and 3 million square feet (278 709 $m^2$) for surge sealift to carry equipment from U.S. ports to meet selected conflict/contingency requirements. As a result of this study, DOD established a program to procure 19 LMSR ships. Five of these ships are container ships converted to LMSR configuration. The remaining 14 ships are new construction. The last LMSR is scheduled to be delivered to MSC in FY 2002.

Since the conversion and new construction LMSRs were built in different shipyards, their size and design are not the same. Ships built in the same shipyard are alike, i.e., the ships converted at the NASSCO shipyard have the same design and the ships converted at the Newport News Shipbuilding and Drydock Company shipyard have the same design. The new construction ships are larger than the conversion ships. Tables 6-8 (page 38-40) provide specific hold, ramp, and hatch information for the USNS GORDON (a representative LMSR conversion). Figure 13 (page 41) and figure 14 (page 41) show the USNS GORDON's outboard and inboard profiles while figure 15 (page 41) illustrates typical side and end ramp positions. Figure 16 (page 42) illustrates a typical lashing pattern.

**5.3.6.3 Fast sealift ships (FSS).** Until recently, the most prevalent RO/RO vessels used for military training and exercises were the FSS of the MSC Fast Sealift Squadron. These vessels have secondary container and breakbulk capabilities. The FSS is a side-ramp loading vessel. Figure 17 (page 42) shows the general layout of the FSS vessels and table 9 (page 43) and table 10 (page 44) give specific hold and ramp information. Figures 18-20 (pages 45-46) show detailed profiles of the FSS vessel. Figure 21 (page 46) illustrates a typical lashing pattern.

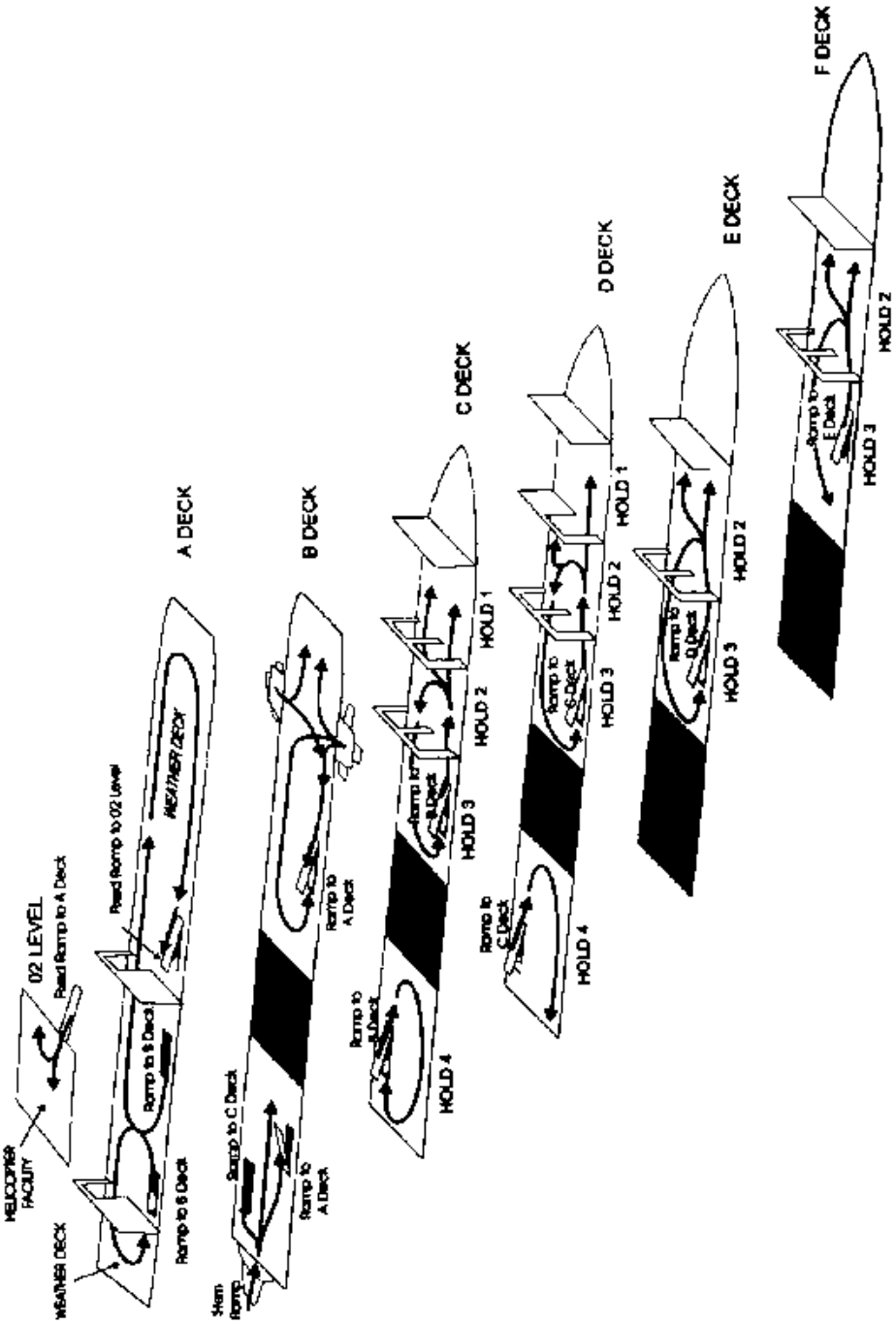


**FIGURE 12. Typical RORO loading traffic flow (USNS Gordon).**

**TABLE 6. LMSR hold summary (USNS Gordon) .**

| Deck | Hold | Hatch Opening Length by Width (ft, m) | Height in Hold (ft, m) | Allowable Deck Load (lb per ft$^2$, kPa) | Boom Lift Capacity (LTON, lb, kg) | RORO Stowage Area (ft$^2$, m$^2$) |
|---|---|---|---|---|---|---|
| 02 Level | - | 58’ 8” by 18’ 7”<br>17.9 m by 5.7 m | 10’ 6”<br>3.2 m | 350<br>16.8 | 113<br>253,120<br>113 000 | 16,102<br>1496 |
| A Fwd | - | 68’ 1” by 32’ 0”<br>20.8 m by 9.8 m | 15’ 6”<br>4.7 m | 350<br>16.8 | 113<br>253,120<br>113 000 | 20,800<br>1932 |
| A Aft | - | 68’ 1” by 32’ 0”<br>20.8 m by 9.8 m | 10’ 6”<br>3.2 m | 350<br>16.8 | 113<br>253,120<br>113 000 | 8,820<br>819 |
| A | 3 (fwd)<br><br>3 (aft) | 54’ 1” by 16’ 1”<br>16.5 m by 4.9 m<br>54’ 1” by 16’ 1”<br>16.5 m by 4.9 m | 15’ 6”<br>4.7 m<br>10’ 6”<br>3.2 m | 550<br>26.3<br>550<br>26.3 | 113<br>253,120<br>113 000 | 26,781<br>2488<br>2,016<br>187 |
| A - B [1] | 1<br><br>2<br><br>3 | 54’ 1” by 16’ 1”<br>16.5 m by 4.9 m<br>54’ 1” by 16’ 1”<br>16.5 m by 4.9 m<br>54’ 1” by 16’ 1”<br>16.5 m by 4.9 m | 7’ 6”<br>2.3 m<br>7’ 6”<br>2.3 m<br>7’ 6”<br>2.3 m | 200<br>9.6<br>200<br>9.6<br>200<br>9.6 | 113<br>253,120<br>113 000 | 6,663<br>619<br>10,836<br>1007<br>12,767<br>1186 |
| B | 1<br><br>2<br><br>3<br><br>4 | 54’ 1” by 16’ 1”<br>16.5 m by 4.9 m<br>54’ 1” by 16’ 1”<br>16.5 m by 4.9 m<br>54’ 1” by 16’ 1”<br>16.5 m by 4.9 m<br>54’ 1” by 16’ 1”<br>16.5 m by 4.9 m | 13’ 0” (4.0 m) and<br>21’ 0” (6.4 m) 2<br>13’ 0” (4.0 m) and<br>21’ 0” (6.4 m) 2<br>13’ 0” (4.0 m) and<br>21’ 0” (6.4 m) 2<br>15’ 6” (4.7 m) | 550, 26.3<br><br>550, 26.3<br><br>550, 26.3<br><br>550, 26.3 | 113<br>253,120<br>113 000 | 7,985 (742) and<br>2,291 (213) 2<br>12,251 (1138) and<br>2,691 (250) 2<br>14,998 (1393) and<br>1,187 (110) 2<br>15,573 (1447) |
| B - C [1] | 2<br><br>3 | 54’ 1” by 16’ 1”<br>16.5 m by 4.9 m<br>54’ 1” by 16’ 1”<br>16.5 m by 4.9 m | 7’ 6”<br>2.3 m<br>7’ 6”<br>2.3 m | 200, 9.6<br>200, 9.6 | 113<br>253,120<br>113 000 | 11,030<br>1025<br>12,177<br>1131 |
| C | 1<br><br>2<br><br>3<br><br>4 | 54’ 1” by 16’ 1”<br>16.5 m by 4.9 m<br>54’ 1” by 16’ 1”<br>16.5 m by 4.9 m<br>54’ 1” by 16’ 1”<br>16.5 m by 4.9 m<br>54’ 1” by 16’ 1”<br>16.5 m by 4.9 m | 15 ft. 6 in. (4.7 m)<br><br>7 ft 6 in. (2.3 m) and<br>15 ft. 6 in. (4.7 m) 2<br>7 ft 6 in. (2.3 m) and<br>15 ft. 6 in. (4.7 m) 2<br>12 ft 0 in. (3.7 m) | 550<br>26.3<br>550<br>26.3<br>550<br>26.3<br>550<br>26.3 | 113<br>253,120<br>113 000 | 6,143<br>571<br>12,564 (1167) and<br>1,215 (113)<br>13,346 (1240) and<br>1,232 (114)<br>15,715<br>1460 |

**TABLE 6. LMSR hold summary (USNS Gordon) - Continued.**

| Deck | Hold | Hatch Opening Length by Width (ft, m) | Height in Hold (ft, m) | Allowable Deck Load (lb per ft$^2$, kPa) | Boom Lift Capacity (LTON, lb, kg) | RORO Stowage Area (ft$^2$, m$^2$) |
|---|---|---|---|---|---|---|
| D | 1 | 54’ 1” by 16’ 1”<br>16.5 m by 4.9 m | 10’ 6”<br>3.2 m | 550<br>26.3 | 113<br>253,120 | 3,200<br>297 |
| | 2 | 54’ 1” by 16’ 1”<br>16.5 m by 4.9 m | 10’ ft 6”<br>3.2 m | 550<br>26.3 | 113 000 | 12,325<br>1145 |
| | 3 | 54’ 1” by 16’ 1”<br>16.5 m by 4.9 m | 10’ 6”<br>3.2 m | 550<br>26.3 | | 16,731<br>1554 |
| | 4 | 54’ 1” by 16’ 1”<br>16.5 m by 4.9 m | 12’ 0”<br>3.7 m | 550<br>26.3 | | 8,080<br>751 |
| E | 2 | 54’ 1” by 16’ 1”<br>16.5 m by 4.9 m | 10’ 6”<br>3.2 m | 550<br>26.3 | 113<br>253,120 | 10,127<br>941 |
| | 3 | 54’ 1” by 16’ 1”<br>16.5 m by 4.9 m | 10” 6”<br>3.2 m | 550<br>26.3 | 113 000 | 16,317<br>1516 |
| F | 2 | 54’ 1” by 16’ 1”<br>16.5 m by 4.9 m | 9’ 4”<br>2.8 m | 550<br>26.3 | 113<br>253,120 | 5,055<br>469 |
| | 3 | 54’ 1” by 16’ 1”<br>16.5 m by 4.9 m | 9’ 4”<br>2.8 m | 550<br>26.3 | 113 000 | 11,136<br>1035 |

[1] These decks can be raised in sections to increase the height of the deck below.

[2] Under the deck hatch. For design purposes, subtract 6" from the lower listed values to ensure adequate clearance.

**TABLE 7. LMSR fixed-ramp characteristics (USNS Gordon) .**

| Ramp 1/ | Vertical Clearance | Width (ft-in., m) | Strength (lb per ft$^2$, kPa) |
|---|---|---|---|
| A/B (fwd) | 15 ft 6 in., 4.7 m | 18 ft. 0 in., 5.5 m | 550, 26.3 |
| A/B (aft) | 15 ft 6 in., 4.7 m | 18 ft. 0 in.,5.5 m | 550, 26.3 |
| B/C (fwd) | 15 ft 6 in, 4.7 m. | 18 ft. 0 in., 5.5 m | 550, 26.3 |
| B/C (aft) | 12 ft 0 in., 3.7 m | 18 ft. 0 in., 5.5 m | 550, 26.3 |
| C/D (fwd) | 10 ft 6 in., 3.2 m | 18 ft. 0 in., 5.5 m | 550, 26.3 |
| C/D (aft) | 12 ft 0 in., 3.7 m | 18 ft. 0 in., 5.5 m | 550, 26.3 |
| D/E | 10 ft 6 in., 3.2 m | 18 ft. 0 in., 5.5 m | 550, 26.3 |
| E/F | 9 ft 4 in., 2.8 m | 18 ft. 0 in., 5.5 m | 550, 26.3 |
| 02/A | 15 ft 6 in., 4.7 m | 18 ft. 0 in., 5.5 m | 350, 16.8 |
| B4 | 7 ft 6 in., 2.3 m | 18 ft. 0 in., 5.5 m | 550, 26.3 |

1/ Vehicles can be stowed on all ramps.

**TABLE 8. Cargo hold door dimensions and locations (USNS Gordon).**

| Deck | Hold | Dimensions (W x H) | Location | Type |
|---|---|---|---|---|
| A | 3 | 22’ 1” X 10’ 6”<br>6.7 m X 3.2 m | 1 door, portside aft | Horizontal Sliding - Watertight |
| A | 3 | 22’ 1” X 15’ 6”<br>6.7 m X 4.7 m | 1 door, portside forward | Horizontal Sliding - Watertight |
| A | 4 | 18’ 1” X 16’ 11”<br>5. 5 m X 5.2 m | 1 door, mid ramp from A-B | Top-hinged - Fire |
| B | 3 | 18’ 11” X 16’ 0”<br>17.3 m X 4.9 m | 1 door, bottom of ramp from A-B | Vertical Sliding - Fire |
| B | 3 | 18’ 11” X 16’ 0”<br>17.3 m X 4.9 m | 1 door, top of ramp from A-B | Top-hinged - Fire Weathertight |
| C | 2 | 22’ 1” X 15’ 6”<br>6.7 m X 4.7 m | 1 door port, 1 door starboard | Horizontal Sliding - Watertight |
| C | 3 | 22’ 1” X 16’ 8”<br>6.7 m X 5.1 m | 1 door, portside | Horizontal Sliding - Watertight |
| C | 3 | 18’ 1” X 16’ 0”<br>5.5 m X 4.9 | 1 door, starboard | Horizontal Sliding - Watertight |
| D | 2 | 22’ 1” X 10’ 6”<br>6.7 m X 3.2 m | 1 door, starboard | Horizontal Sliding - Watertight |
| D | 3 | 18’ 1” X 10’ 6”<br>5.5 m X 3.2 m | 1 door, bottom of ramp from C to D | Top-hinged - Fire |
| E | 3 | 22’ 1” X 10’ 6”<br>6.7 m X 3.2 m | 1 door port, 1 door starboard | Horizontal Sliding - Watertight |
| E | 3 | 18’ 1” X 10’ 6”<br>5.5 m X 3.2 m | 1 door, bottom of ramp from D to E | Horizontal Sliding - Fire |
| F | 3 | 18’ 0” X 9’ 6”<br>5.5 m X 2.9 m | 1 door port, 1 door starboard | Horizontal Sliding - Watertight |

**FIGURE 13. LMSR outboard profile (USNS Gordon).**

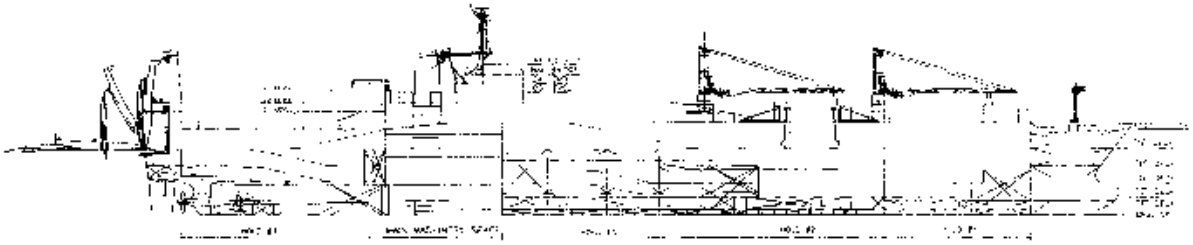

**FIGURE 14. LMSR inboard profile (USNS Gordon).**

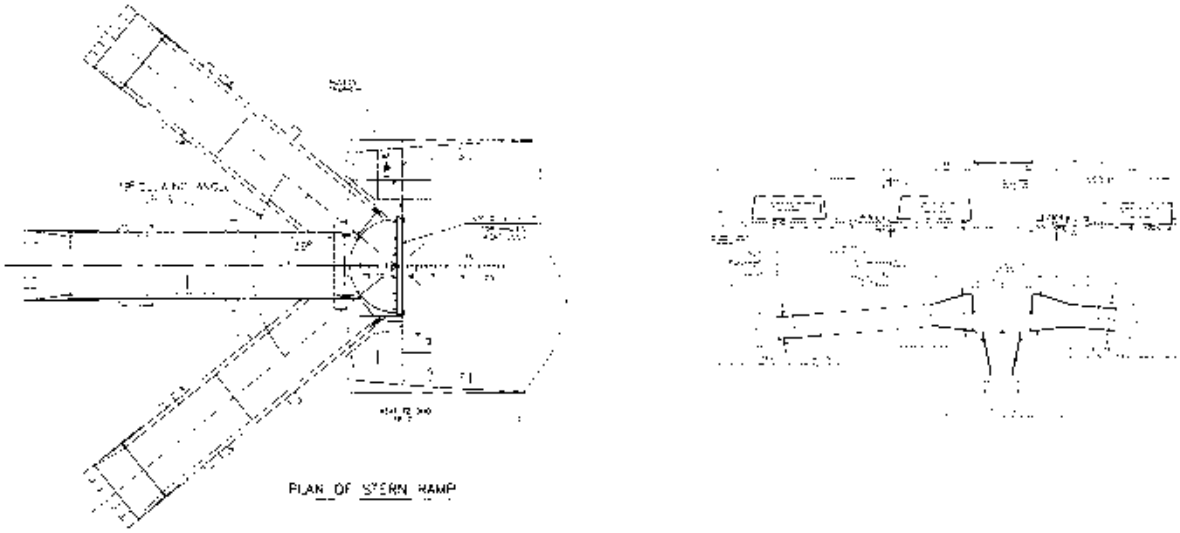


**FIGURE 15. Typical LMSR end/side ramp positions (USNS Gordon).**

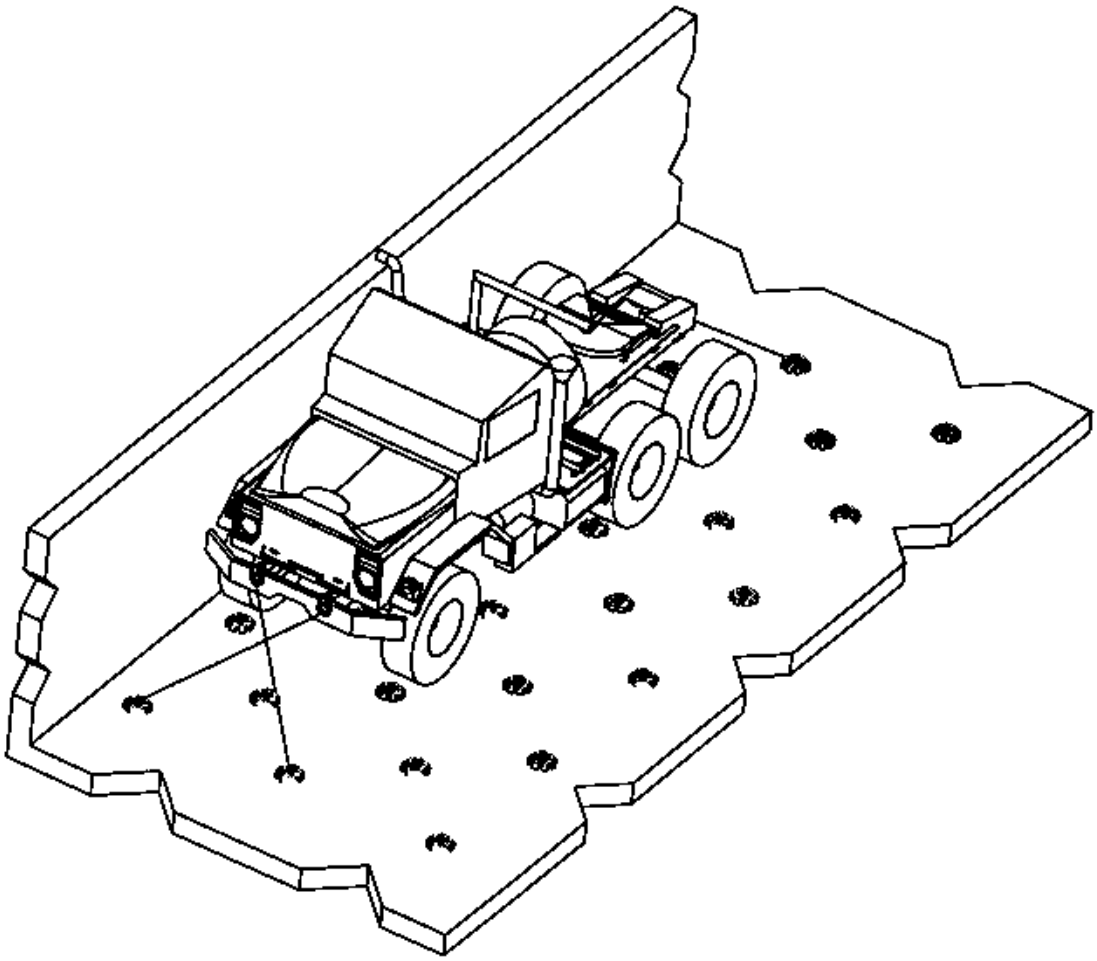

**FIGURE 16. Typical LMSR lashing pattern.**

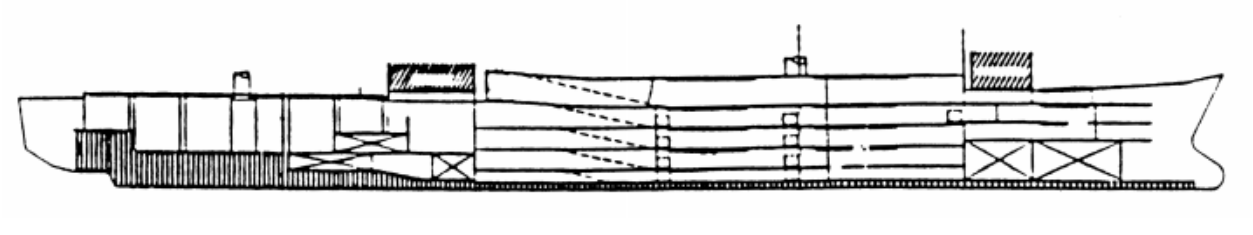

**FIGURE 17. FSS general layout.**

**TABLE 9. FSS Hold Summary .**

| Hold [1] | Deck | Hatch Opening Length by Width (ft, m) | RORO Clear Height (ft, m) | LOLO Clear Height (ft, m) [2] | Allowable Deck Load (lb per ft$^2$, kPa) |
|---|---|---|---|---|---|
| 1 | Main | 38 x 21, 11.6 x 6.4 | N/A | 8’ 0", 2.4 | 200, 9.58 |
| | Second | 35 x 18, 10.7 x 5.5 | 8’ 0", 2.4 | N/A | 525, 25.14 |
| | 37 ft Flat (11.2 m) | 17 x 18, 5.2 x 5.5 | N/A | 12’ 8", 3.9 | 200, 9.58 |
| 2 | Weather | 68 x 31.8, 20.7 x 9.7 | 13’ 0", 4.0 | N/A | 200, 9.58 |
| | A | 54 x16, 16.5 x 4.9 | 13’ 0", 4.0 | 19’ 6", 5.9 | 525, 25.14 |
| | B | 54 x 16, 16.5 x 4.9 | 13’ 0", 4.0 | 13’ 6", 4.1 | 525, 25.14 |
| | C | 54 x 16, 16.5 x 4.9 | 13’ 0", 4.0 | 13’ 6", 4.1 | 525, 25.14 |
| | D | N/A | 13’ 0", 4.0 | 13’ 6", 4.1 | 525, 25.14 |
| | E | N/A | 8’ 2", 2.5 | N/A | 200, 9.58 |
| 3 | Weather | 68 x 31.8, 20.8 x 9.7 | 13’ 0", 4.0 | N/A | 200, 9.58 |
| | A | 54 x 16, 16.5 x 4.9 | 13’ 0", 4.0 | 13’ 6", 4.1 | 525, 25.14 |
| | B | 54 x 16, 16.5 x 4.9 | 13’ 0", 4.0 | 13’ 6", 4.1 | 525, 25.14 |
| | C | 54 x 16, 16.5 x 4.9 | 13’ 0", 4.0 | 13’ 6", 4.1 | 525, 25.14 |
| | D | 25 x 16, 7.6 x 4.9 | 13’ 0", 4.0 | 13’ 6", 4.1 | 525, 25.14 |
| | E | N/A | 8’ 2", 2.5 | 8’ 6", 2.6 | 200, 9.58 |
| 4 | Weather | N/A | 13’ 0", 4.0 | N/A | 200, 9.58 |
| | A | N/A | 13’ 0", 4.0 | 19’ 6", 5.9 | 525, 25.14 |
| | B | N/A | 13’ 0", 4.0 | N/A | 525, 25.14 |
| | C | N/A | 13’ 0", 4.0 | N/A | 525, 25.14 |
| | D | N/A | 13’ 0", 4.0 | N/A | 525, 25.14 |
| | E | N/A | 8’ 2", 2.5 | N/A | 200, 9.58 |

[1] The boom lift capacity of all holds is 70 LTON (156,800 lb, 7000 kg).

[2] RORO clear heights are based on smallest constraints (height of watertight doors) on route from side port opening to hold. These values are actual dimensions. For design purposes, subtract 6" from the RORO and LOLO clear heights to ensure adequate clearance.

**TABLE 10. FSS Fixed-ramp characteristics .**

| Leading | | Width (ft, m) [1] | Height (ft, m) [1] | Ramp Strength (lb per ft$^2$, kPa) |
|---|---|---|---|---|
| From | To | | | |
| 2nd Deck | B Deck | 12’ 0", 3.7 | 10’ 0", 3.0 | 525, 25.14 |
| A Deck | B Deck | 18’ 0", 5.5 | 13’ 0", 4.0 | 525, 25.14 |
| B Deck | C Deck | 18’ 0", 5.5 | 13’ 0", 4.0 | 525, 25.14 |
| C Deck | D Deck | 18’ 0", 5.5 | 13’ 0", 4.0 | 525, 25.14 |
| D Deck | E Deck | 12’ 10", 3.9 | 8’ 2", 2.5 | 200, 9.58 |
| MD (aft) | A Deck | 12’ 0", 3.7 | 8’ 4", 2.5 | 200, 9.58 |

[1] The width and height values given are actual dimensions. For design purposes, subtract 12" from the width values and 6" from the height values to ensure adequate clearance. Vehicles may be stowed on all ramps.

**5.3.6.4 Cape D class.** The Cape D class of RO/RO ships were designed and built as commercial vehicle transporters. Currently, these vessels are configured as wheeled and tracked RO/RO carriers with some container stowage capability. Table 11 (page 47) provides Cape D vessel characteristics.

**5.3.6.5 Cape H class.** The Cape H class of RO/RO ships were designed as combination RO/RO and container carriers for operations in underdeveloped ports. Lift-on operations are accomplished with a 39-LTON capacity pedestal. Table 11 (page 47) provides Cape H vessel characteristics.

**5.3.6.6 Miscellaneous RO/RO vessels.** Other RO/RO vessels in the current RRF are shown in Table 12 (page 49).

**5.3.7 Support Vessels.** To support cargo operations at underdeveloped ports, the military is establishing a fleet of support vessels. The auxiliary crane ships’ (T-ACS) primary function is to load or discharge nonself-sustaining cargo. Table 13 (page 50) provides transport characteristics for the T-ACS.

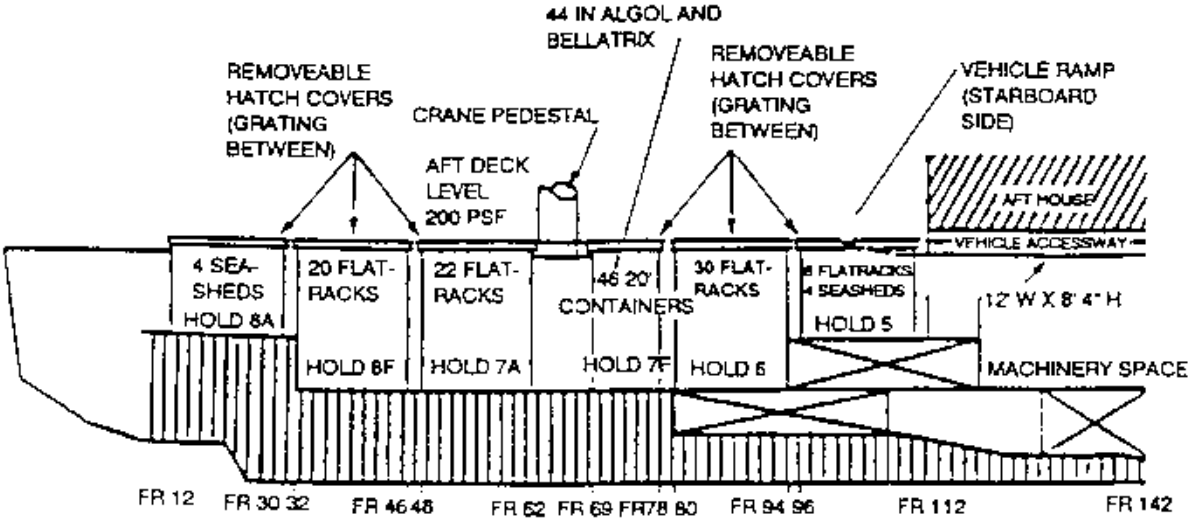


**FIGURE 18. Profile of aft section of FSS.**

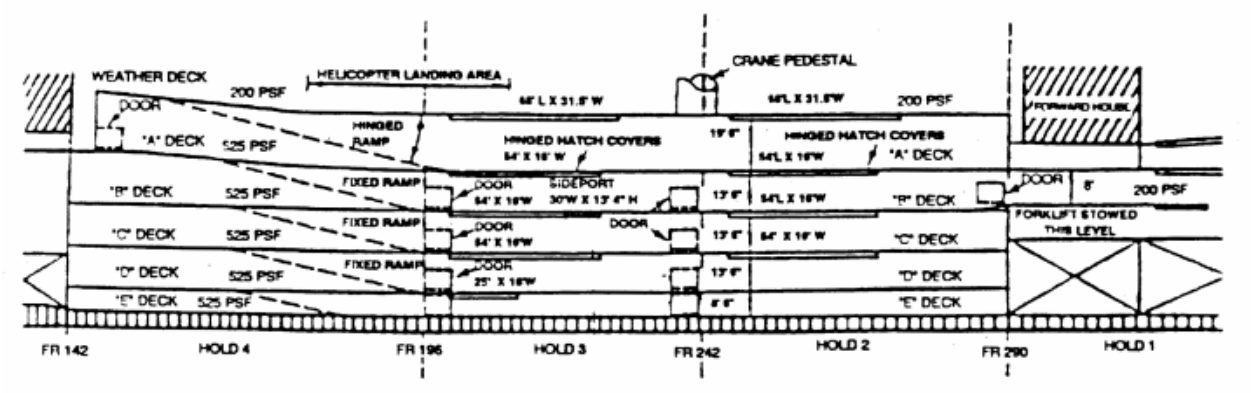


**FIGURE 19. Profile of mid section of FSS.**

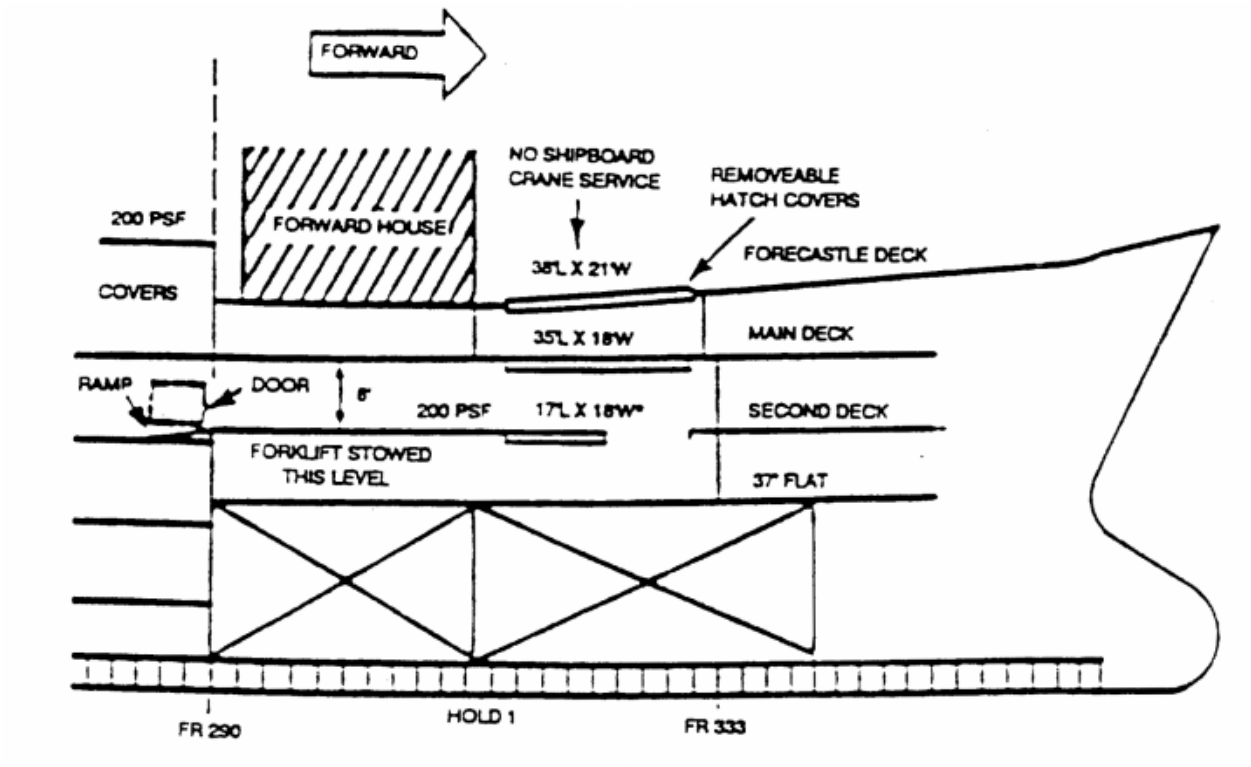


**FIGURE 20. Profile of forward section of FSS.**

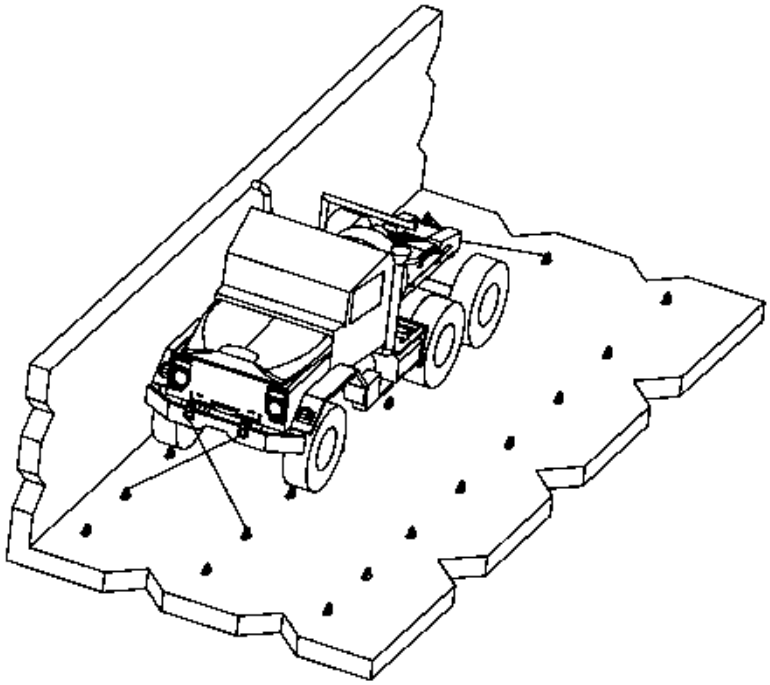

**FIGURE 21. Typical FSS lashing pattern.**

.

## TABLE 11. RORO ship characteristics .

| Vessel Class | No. of Ships | Length (ft, m) | Beam (ft, m) | Crane Capacity (LTON, lb, kg) | Cargo Deadweight (LTON, lb, kg) | Total Deck Area ($ft^2$, $m^2$) | No. of Lower Decks [1] | Deck Height Range (ft, m) [2] | External Ramp Access Door (width by height, ft, m) [3] | Ramp Capacity (LTON, lb, kg) |
|---|---|---|---|---|---|---|---|---|---|---|
| FSS | 8 | 946’<br>288 | 105’<br>32 | 70<br>156,800<br>70 000 | 25,500<br>57,120,000<br>25 500 000 | 204,276<br>to<br>217,288<br>18 978 to<br>20 187 | 5 | 8’ 0" to 19’ 6"<br>2.4 to 5.9 | 30’ 0" by 13’ 6"<br>9.1 by 4.1 | 65.0<br>145,600<br>65 000 [4] |
| LMSR (new) | 14 | 950’<br>290 | 106’<br>32 | 110<br>246,400<br>110 000 | 19,039<br>42,647,360<br>19 039 000 | 396,123<br>to<br>400,905<br>36 801 to<br>37 245 | 7 | 7’ 6" to 21’ 0"<br>2.3 to 6.4 | 40’ 0" by 16’ 0"<br>12.2 by 4.9 | 125.0<br>280,000<br>125 000 |
| LMSR (con-version) | 5 | 907’ to<br>956’<br>276 to<br>291 | 106<br>32 | 110<br>246,400<br>110 000 | 15,205<br>34,059,200<br>15 205 000 | 302,087<br>to<br>321,831<br>28 065 to<br>29 899 | 7 | 5’ 5" to 17’ 9"<br>1.6 to 5.4 | 23’ 0" by 17’ 0"<br>7.0 by 5.2 | 125.0<br>280,000<br>125 000 |
| Cape D | 5 | 680’<br>207 | 97’<br>30 | N/A | 18,450<br>43,292,480<br>18 450 000 | 167,355<br>to<br>187,249<br>15 548 to<br>17 396 | 4 | 5’ 5” to 17’ 9”<br>1.6 to 5.4 | 23’ 0” by 17’ 0”<br>7.0 by 5.2 | 65<br>145,600<br>65 000 |
| Cape E | 1 | 653’<br>199 | 94’<br>29 | 36<br>80,640<br>36 000 | 19,327<br>42,608,710<br>19 327 000 | 160,487<br>14 910 | 4 | 9’ 6" to 17’ 9"<br>2.9 to 5.4 | 34’ 4" by 18’ 3"<br>10.5 by 5.6 | 220.0<br>492,800<br>220 000 |
| Cape H | 3 | 750’<br>229 | 106’<br>32 | 39<br>87,360<br>39 000 | 28,278<br>63,342,720<br>28 278 000 | 217,052<br>20 165 | 4 | 6’ 5" to 20’ 7"<br>2.0 to 6.3 | 39’ 4" by 20’ 8"<br>10.5 by 6.3 | 63.9<br>143,136<br>63 900 |
| Cape I | 4 | 685’<br>209 | 102’<br>31 | 30<br>67,200<br>30 000 | 15,668<br>35,096,320<br>15 668 000 | 135,924<br>to<br>150,827<br>12 628 to<br>14 012 | 4 | 9’ 11" to 17’<br>11"<br>3.0 to 5.5 | 40’ 0" by 16’ 0"<br>12.2 by 4.9 | 100.0<br>224,000<br>100 000 |
| Cape K | 2 | 696’<br>212 | 106’<br>32 | N/A | 22,000<br>49,280,000<br>22 000 000 | 146,912<br>13 649 | 3 | 10’ 1" to 21’ 0"<br>3.1 to 6.4 | 29’ 10” by 22’<br>11”<br>9.1 by 7.0 | 200.0<br>448,000<br>200 000 |
| Cape L | 2 | 682’<br>208 | 75’<br>23 | N/A | 18,837<br>42,194,880<br>18 837 000 | 75,586<br>7022 | 3 | 5’ 3" to 14’ 4"<br>1.6 to 4.4 | 12’ 8" by 17’ 3"<br>3.9 by 5.3 | 30.0<br>67,200<br>30 000 |
| Cape R | 3 | 648’<br>198 | 106’<br>32 | N/A | 20,500<br>45,920,000<br>20 500 000 | 134,447<br>12 491 | 3 | 11’ 2" to 22’ 7"<br>3.4 to 6.9 | 41’ 0" by 23’ 6"<br>12.5 by 7.2<br>(stern)<br>21’ 0" by 20’ 4"<br>6.4 by 6.2 (side) | 100.0<br>224,000<br>100 000 (stern)<br>60.0<br>134,400<br>60 000 (side) |

## TABLE 11. RORO ship characteristics - Continued.

| Vessel Class | No. of Ships | Length (ft, m) | Beam (ft, m) | Crane Capacity (LTON, lb, kg) | Cargo Deadweight (LTON, lb, kg) | Total Deck Area ($ft^2$, $m^2$) | No. of Lower Decks [1] | Deck Height Range (ft, m) [2] | External Ramp Access Door (width by height, ft, m) [3] | Ramp Capacity (LTON, lb, kg) |
|---|---|---|---|---|---|---|---|---|---|---|
| Cape T | 3 | 634’<br>193 | 89’<br>27 | N/A | 12,300<br>27,552,000<br>12 300 000 | 116,042<br>to<br>117,514<br>10 781 to<br>10 917 | 3 | 13’ 3"<br>4.0 | 36’ 9" by 24’ 7"<br>11.2 by 7.5<br>(stern)<br>16’ 0" by 16’ 7"<br>4.9 by 5.1 (stern) | 160.0<br>358,400<br>160 000 (stern)<br>40.0<br>89,600<br>40 000 (side) |
| Cape V | 2 | 632’<br>193 | 87’<br>27 | N/A | 18,200<br>40,768,000<br>18 200 000 | 105,450<br>9797 | 2 | 19’ 0"<br>5.8 | 41’ 8” by 20’ 4”<br>12.7 by 6.2 | 200.0<br>448,000<br>200 000 |
| Cape W | 2 | 698’<br>213 | 106’<br>32 | N/A | 29,700<br>65,528,000<br>29 700 000 | 215,511<br>20 022 | 11 | 5’ 7" to 20’ 0"<br>1.7 to 6.1 | 26’ 0" by 22’ 0"<br>7.9 by 6.7 | 200.0<br>448,000<br>200 000 |
| Ambassador | 2 | 534’<br>163 | 71’<br>22 | N/A | 7,708<br>17,265,920<br>7 708 000 | 79,558<br>7391 | 3 | 15’ 0" to 20’ 6"<br>4.6 to 6.2 | 30’ 0" by 22’ 0"<br>9.1 by 6.7 | 59.1<br>132,384<br>59 100 |
| Comet | 1 | 499’<br>152 | 78’<br>24 | 60<br>134,400<br>60 000 | 8,175<br>18,312,000<br>8 175 000 | 88,366<br>8209 | 4 | 6’ 11" to 12’ 9"<br>2.1 to 3.9 | 19’ 0" by 12’ 0"<br>5.8 by 3.7 | 60.0<br>134,400<br>60 000 |
| Meteor | 1 | 504’<br>154 | 83’<br>25 | 70<br>156,800<br>70 000 | 10,206<br>22,861,440<br>10 206 000 | 103,603<br>9625 | 4 | 8’ 6” to 14’ 0”<br>2.6 to 4.3 | 18’ 6” by 13’ 0”<br>5.6 by 4.0 (stern)<br>15’ 0” by 13’ 0”<br>4.6 by 4.0 (side) | 56.0<br>125,440<br>56 000 (stern)<br>54<br>120,960<br>54 000 (side) |
| Adm. Wm. M. Callaghan | 1 | 694’<br>212 | 92’<br>28 | 120<br>268,800<br>120 000 | 9,349<br>20,941,760<br>9 349 000 | 148,281<br>13 776 | 4 | 7’ 7" to 14’ 8"<br>2.3 to 4.5 | 42’ 0" by 14’10"<br>12.8 by 4.5<br>(stern)<br>59’ 0” by 14’ 10"<br>18.0 by 4.5 (side) | 55.8<br>124,992<br>55 800 (stern and<br>(side) |
| Cape Orlando | 3 | 635’<br>194 | 92’<br>28 | 25<br>56,000<br>25 000 | 16,850<br>37,744,000<br>16 850 000 | 154,965<br>14 397 | 7 | 5’ 7" to 24’ 2"<br>1.7 to 7.4 | 24’ 11" by 22’ 4"<br>7.6 by 6.8 | 91.6<br>205,184<br>91 600 |
| MPS Maersk | 5 | 755’<br>230 | 90’<br>27 | 120<br>268,600<br>120 000 | 23,000<br>51,520,000<br>23 000 000 | 121,600<br>11 297 | 4 | 7’ 6" to 25’ 6"<br>2.3 to 7.7 | 21’ 4" by 11’ 0"<br>6.5 by 3.4 (stern)<br>28’ 0" by 11’ 0"<br>8.5 by 3.4 (side) | 66.0<br>147,840<br>66 000 (stern and side) |
| MPS Water-man | 3 | 821’<br>250 | 106’<br>32 | 100<br>224,000<br>100 000 | 25,000<br>56,000,000<br>25 000 000 | 152,200<br>14 140 | 5 | 6’ 6" to 18’ 0"<br>2.0 to 5.5 | 44’ 0” by 18’ 1”<br>13.4 by 5.5 | 100.0<br>224,000<br>100 000 |
| MPS Amsea | 5 | 673’<br>205 | 106’<br>32 | 78<br>174,720<br>78 000 | 25,384<br>56,860,160<br>384 000 | 152,200<br>14 140 | 7 | 6’ 6" to 15’ 0"<br>2.0 to 4.6 | 44’ 0" by 18’ 0"<br>13.4 by 5.5 | 60.0<br>134,400<br>60 000 |

[1] The number of lower decks includes any car or retractable decks.

[2] The values given are actual dimensions. For design purposes, subtract 6" from the maximum deck height to ensure adequate clearance.

[3] The values given are actual dimensions. For design purposes, subtract 12" from the width values and 6" from the height vales to ensure adequate clearance.

[4] The number given is for pierside operations. The ramp capacity for instream operations is 172,000 lb (78 018 kg) calm/59,000 lb (26 762 kg) sea state 3.

.

## TABLE 12. Auxiliary ship characteristics .

| MARAD Design | No. of Vessels | Vessel | Length (ft, m) | Beam (ft, m) | Max. Draft (ft, m) | Cargo Deadweight (LTON, lb, kg) | Tandem Max. Boom Capacity [1] (LTON, lb, kg) |
|---|---|---|---|---|---|---|---|
| C6-S-1qd | 3 | Keystone State (T-ACS 1)<br>Gem State (T-ACS 2)<br>Grand Canyon State (T-ACS 3) | 669’<br>203.9 | 75’<br>22.9 | 33’<br>10.1 | 10,370<br>23,228,800<br>10 370 000 | 105<br>335,200<br>105 000 |
| C5-S-MA73c | 3 | Gopher State (T-ACS 4)<br>Flickertail State (T-ACS 5)<br>Cornhusker State (T-ACS 6) | 610’<br>185.9 | 76’<br>23.2 | 32’<br>9.8 | 12,700<br>28,448,000<br>12 700 000 | 120<br>268,800<br>120 000 |
| C6-S-MA1xb | 2 | Diamond State (T-ACS 7)<br>Equality State (T-ACS-8) | 668’<br>204 | 76’<br>23.2 | 33’<br>10.1 | 11,700<br>26,208,000<br>11 700 000 | 120<br>268,800<br>120 000 |
| C6-S-MA60d | 2 | Green Mountain State (T-ACS 9)<br>Beaver State (T-ACS 10) | 665’<br>203 | 75’<br>22.9 | 32’<br>9.8 | 6,500<br>14,560,000<br>6 500 000 | 120<br>268,800<br>120 000 |

[1] See Table 14 for additional T-ACS crane capabilities.

| Hold | Deck | Hatch Dimensions (ft, m) [2] | |
|---|---|---|---|
| | | Center | Port and Starboard |
| 1 | Foc’sle | 21’ 0” by 19’ 4”<br>6.4 by 5.9 | - |
| 2 | Main | | 43’ 3” by 26’ 10”<br>43’ 3” by 18’ 2”<br>13.2 by 8.2, 13.2 by 5.5 |
| 3 | Main | | 43’ 3” by 26’ 10”<br>13.2 by 8.2 |
| 4 | Main | 43’ 2” by 26’ 10”<br>13.2 by 8.2 | 43’ 3” by 18’ 2”<br>13.2 by 5.5 |
| 4A | Main | 43’ 2” by 26’ 10”<br>13.2 by 8.2 | 43’ 3” by 18’ 2”<br>13.2 by 5.5 |
| 4B | Main | 43’ 2” by 26’ 10”<br>13.2 by 8.2 | 43’ 3” by 18’ 2”<br>13.2 by 5.5 |
| 5 | Main | 43’ 2” by 26’ 10”<br>13.2 by 8.2 | |
| 6 | Main | 43’ 2” by 26’ 10”<br>13.2 by 8.2 | |
| 7 | Main | 43’ 2” by 26’ 10”<br>13.2 by 8.2 | |

[2] The values given are actual dimensions. For design purposes, subtract 12" (.3m) from the length and width values to ensure adequate clearance.

**TABLE 13. T-ACS Ship Crane Capabilities .**

| Ship | Single [1] (LTON, ft lb, ft kg, m) | Twin [1] (LTON, ft lb, ft kg, m) | Tandem (LTON, ft lb, ft kg, m) |
|---|---|---|---|
| T-ACS 1/2/3 | 30 LTON @ 111’<br>67,200 @ 111’<br>30 000 @ 34 starboard | 60 LTON @ 86’<br>134,400 @ 86’<br>60 000 @ 26 starboard | 105 LTON @ 14’<br>235,200 @ 14’<br>105 000 @ 4 port |
| T-ACS 4/5/6 | 30 LTON @ 110’<br>67,200 @ 110’<br>30 000 @ 34 starboard | 60 LTON @ 110’<br>134,400 @ 110’<br>60 000 @ 34 starboard | 120 LTON @ 14’<br>268,800 @ 14’<br>120 000 @ 4 port |
| T-ACS 7/8 | 30 LTON @ 111.5’<br>67,200 @ 111.5’<br>30 000 @ 34 starboard | 60 LTON @ 111.5’<br>134,400 @ 111.5’<br>60 000 @ 34 starboard | 120 LTON @ 14’<br>268,800 @ 14’<br>120 000 @ 4 port |
| T-ACS 9/10 [2] | 30 LTON @ 111’<br>67,200 @ 111’<br>30 000 @ 34 starboard | 60 LTON @ 111’<br>134,400 @ 111’<br>60 000 @ 34 starboard | 120 LTON @ 14’<br>268,800 @ 14’<br>120 000 @ 4 port |

[1] Turntable parallel to centerline.
[2] Estimated.

**5.3.8 Logistics-over-the-shore (LOTS) operations and inland waterways.**

**5.3.8.1 General.** LOTS operations involve transferring military equipment and supplies from cargo ships anchored offshore to the beach in support of forces ashore. This transfer of cargo from ship to shore is accomplished by military lighterage. The lighterage used to offload cargo vessels positioned offshore consists of amphibian and landing craft (conventional) vessels. The lighterage must be compatible with the vessels they service and the cargo needing transportation. Table 14 (page 51) lists the lighterage as they are best paired to particular cargo vessels. Vehicle design approach/departure angles must prevent contact at the ramp crest/toe for a 15 degree ramp angle.

**TABLE 14. LOTS Lighterage Compatibility .**

| Ship Type | Lighterage |
|---|---|
| Breakbulk | LCU, LCM-8, LARC-LX |
| Container | Causeway Ferry, LCU, LARC-LX |
| RO/RO | Causeway Ferry, LCU, LCM-8, LSV |
| LASH | Craft for barge towing |
| SEABEE | Craft for barge towing |

**5.3.8.2 Amphibian.** Amphibious craft fall under two basic categories, wheeled and air cushioned. The lighter amphibious resupply cargo-60 tons (54 431 kg) (LARC-LX) is the current wheeled amphibious craft. The current air cushioned amphibious craft is the U.S. Navy's lighter cushioned air cargo (LCAC). The transport weight and dimensional constraints for the amphibious watercraft are given in Table 15 (page 52). Figure 22 (page 53) shows a plan view of the LARC-LX cargo deck.

**5.3.8.3 Landing craft.** Landing craft are conventional watercraft designed to transport cargo from ship to shore. Landing craft consist of three basic classes; landing craft mechanized (LCM), landing craft utility (LCU), and logistic support vessel (LSV). Table 15 (page 52) provides transport weights and dimensional constraints for the landing craft.

**5.3.8.4 Designing for transport aboard amphibious ships.** When transport aboard amphibious shipping is a requirement, the materiel developer and/or contractor shall design SEM to the constraints identified in the Ship's Loading Characteristics Pamphlet (SLCP) for the required class of amphibious ship. The LHA, LHD, LPH, LPD, LSD, and LST comprise the list of available amphibious ships. The U.S. Navy prepares SLCPs for each amphibious ship. SLCPs can be obtained from the Defense Technical Information Center, 8725 J. Kingman Rd., Suite 0944, Ft. Belvoir, VA 22060-6218.

**5.3.9 Modeling and simulation for marine.** For marine transport, 3D modeling supports development of restraint procedures. Multibody dynamic analysis allows simulation of ramp cresting and review of turning radii for access to and maneuvering within ship holds.

.

**TABLE 15. USA, USMC, and USN lighterage .**

| | Cargo Deck Length (ft, m) | Cargo Deck Width (ft, m) | Cargo Capacity (short tons, lb, kg)) | Bow ramp Capacity (short tons, lb, kg) | Bow Ramp Width (ft, m) [1] | Bow Height Limit (ft, m) [1] | Stern Ramp Capacity (short tons, lb, kg) | Stern Ramp Width (ft, m) [1] | Stern Height Limit (ft, m) [1] |
|---|---|---|---|---|---|---|---|---|---|
| LARC-LX | 42.25’<br>12.9 | 13.83’<br>4.2 [2] | 60.0<br>120,000<br>54 431 | 60.0<br>120,000<br>54 431 | 13.83<br>4.2 | N/A | N/A | N/A | N/A |
| LCM-8 | 42.75’<br>13.0 | 14.50’<br>4.4 | 60.0<br>120,000<br>54 431 | 65.0<br>130,000<br>58 967 | 14.50<br>4.4 | N/A | N/A | N/A | N/A |
| LCU-1466 | 75.50’<br>23.0 | 29.50’<br>9.0 | 168.0<br>336,000<br>152 407 | - | 14.33<br>4.4 | N/A | N/A | N/A | N/A |
| LCU-1646 | 110.00’<br>33.5 | 28.00’<br>8.5 | 179.2<br>358,400<br>162 568 | 112.0<br>224,000<br>101 605 | 14.00<br>4.3 | N/A | 97.5<br>195,000<br>88 451 | 18.00<br>5.5 | N/A |
| LCU-2000 | 108.00’<br>32.9 | 38.75’<br>11.8 | 350.0<br>700,000<br>317 515 | 224.0<br>448,000<br>203,209 | 16.00<br>4.9 | 30.00 | N/A | N/A | N/A |
| LSV | 256.00’<br>78.0 | 60.00’<br>18.3 | 2,016.0<br>4,032,000<br>1 832 727 | 560.0<br>1,120,000<br>508 023 | 28.00<br>8.5 [3] | 43.50<br>13.3 | N/A | 25.00<br>7.6 | 21.50<br>6.6 |
| LCM Mk. 6 [4] | 37.50’<br>11.4 | 10.83’<br>3.3 | 34.0<br>68,000<br>30 844 | 65.0<br>130,000<br>58 967 | 10.83<br>3.3 | N/A | N/A | N/A | N/A |
| LCM Mk. 8 Mod. 2 (Steel) | 42.00’<br>12.8 | 14.00’<br>4.3 | 60.0<br>120,000<br>54 431 | 65.0<br>130,000<br>58 967 | 14.50<br>4.4 | N/A | N/A | N/A | N/A |
| LCM Mk. 8 Mod. 2 (Aluminum) | 42.00’<br>12.8 | 17.00’<br>5.2 | 65.0<br>130,000<br>58 967 | 65.0<br>130,000<br>58 967 | 14.50<br>4.4 | N/A | N/A | N/A | N/A |
| LCU-1646 [4] | 100.00’<br>30.5 | 12.75’<br>3.9 | 200.0<br>400,000<br>181 437 | 112.0<br>224,000<br>101 605 | 14.50<br>4.4 | N/A | 97.5<br>195,000<br>88 451 | 18.00<br>5.5 | N/A |

**TABLE 15. USA, USMC, and USN lighterage - Continued.**

| | Cargo Deck Length (ft, m) | Cargo Deck Width (ft, m) | Cargo Capacity (short tons, lb, kg)) | Bow ramp Capacity (short tons, lb, kg) | Bow Ramp Width (ft, m) [1] | Bow Height Limit (ft, m) [1] | Stern Ramp Capacity (short tons, lb, kg) | Stern Ramp Width (ft, m) [1] | Stern Height Limit (ft, m) [1] |
|---|---|---|---|---|---|---|---|---|---|
| LCAC [5] | 67.00’<br>20.4 | 27.00’<br>8.2 | 27.0<br>54,000<br>24 494 | 75.0<br>150,000<br>68 039 | 28.33<br>8.6 | N/A | 75.0<br>150,000<br>68 039 | 14.83<br>4.5 | N/A |

[1] Values given are actual dimensions. For design purposes, subtract 12" (.3 m) from the width and 6" (.15.m) from the height limitations for ramps to ensure adequate clearance.

[2] Width is restricted to 12.91’ (3.9 m) so that the item is within the inside tiedown rings. (see figure 22 on page 53).

[3] For wheeled and tracked items, the width of the ramp itself is 19’ (5.8 m). Therefore, the maximum width, width from outside-of-tire to outside-of-tire or outside-of-track to outside-of-track is 19’(5.8 m) minus 1’ (.3 m) to ensure adequate clearance on the LSV bow ramp.

[4] The LCMs 6 and 8 and LCU 1646 are USMC landing craft. The cargo deck width of the LCU 1646 varies from 12.75’(3.9 m) to 25.00’ (7.6 m) throughout the vessel. For design purposes, use the 12.75’ (3.9 m) worst case value.

[5] The Landing Craft, Air Cushioned (LCAC) is a Navy landing craft. The cargo deck contact-area pressure limit is 80 psi (552 kPa). Areas used for loading or unloading cargo, such as ramps, are restricted to wheel or track loads equal to a vertical load factor of 1.5g of the vehicle weight. The cargo capacity listed for the LCAC is at its overload weight (maximum cargo capacity). The **normal** capacity load is 60.0 tons (120,000 lb, 54 431 kg).

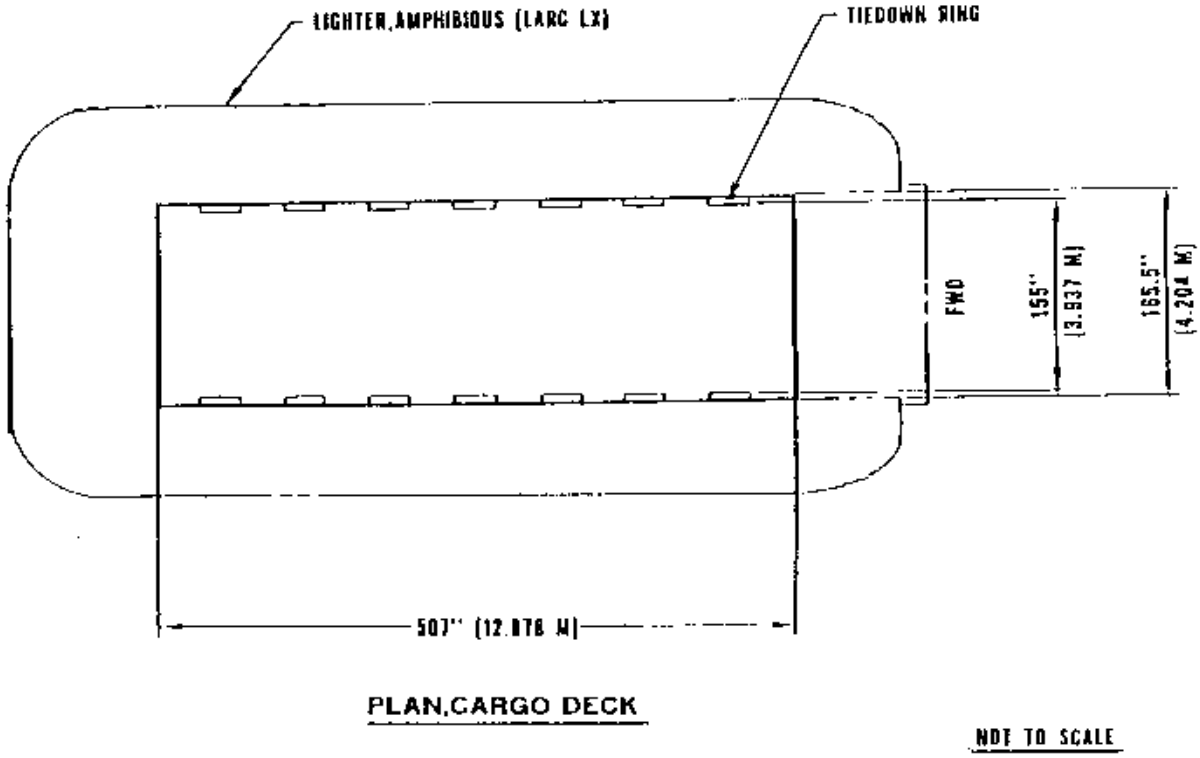


**FIGURE 22. Lighter, Amphibious (LARC-LX).**

**5.4 Fixed-wing air transport.** Fixed-wing aircraft are available for both tactical and strategic cargo missions. Tactical missions generally cover shorter distances, can use airdrop, and may require short field takeoffs or landings. Strategic missions are generally intercontinental from and to large, secure airfields.

**5.4.1 Flyable system weight.** SEM air transport weight must be based on realistic aircraft cargo capability. Each aircraft has a published maximum payload rating based on optimum flight conditions. However, operational planning factors, such as flight altitude and air temperatures, will likely reduce actual payload for a given range. In addition to this are "real-world aircraft factors", such as, aircraft weight increases, age or other conditions that further reduce actual mission payload.

**5.4.2 U.S. military fixed-wing cargo aircraft:**

Air Force cargo aircraft:

C-5A/C-5B (Lockheed Martin (formerly Lockheed))
C-17 (Boeing (formerly McDonnell Douglas))
C-141B (Lockheed Martin (formerly Lockheed))
C-130E/C-130H (Lockheed Martin (formerly Lockheed))
C-130J (Lockheed Martin updated C-130)
C-27 (Alenia G-222)

Army cargo aircraft:

C-23A/B (Shorts 330)
C-12 (Beechcraft King Air 200)

Navy/Marine Corps cargo aircraft:

C-2A (Grumman, Carrier Onboard Delivery (COD))
C-9B (Boeing (formerly McDonnell Douglas), DC-9-30)
KC-130R (Lockheed Martin (formerly Lockheed), Marine Corps tanker)
C-12B (Beechcraft, Super King Air 200)

Other military aircraft types with limited cargo capabilities and/or limited numbers:

C-5C (2 modified C-5As used for Space Shuttle payloads)
KC-10 (Boeing (formerly McDonnell Douglas) DC-10-30 tanker)
KC-135A/E/R (Boeing 707 Tanker)
C-9A (21 Med-Evac Boeing (formerly McDonnell Douglas) DC-9-30s)
C-20 (Gulfstream IV)
C-21 (Learjet)
U-21 (5 Beechcraft King Air 100s)
C-22B (4 Boeing 727-200s)
HU-25 (Dassault USCG "Falcon")
VC-25A (4 Boeing 747-200s)

C-26A (Fairchild Metro 3)
C-29A (British Aerospace 125-800)
C-32A (4 Boeing 757-200s; to replace VIP VC-137s)
C-40A (Boeing 737-700; to replace Navy C-9s)
CT-43 (12 Boeing 737-200s; converted T-43 trainers)

**5.4.3 Design data.** MIL-HDBK-1791, *Designing for Internal Aerial Delivery in Fixed-Wing Aircraft*, is the primary source of design data for military equipment intended for transport in Air Mobility Command (AMC) or Civil Reserve Air Fleet (CRAF) fixed wing aircraft. MIL-HDBK-1791 also includes design requirements for airdrop from AMC aircraft.

**5.4.4 Aircraft cargo handling.** On military aircraft, most wheeled vehicles are loaded, restrained, and carried directly on the aircraft floor. General cargo may also be palletized and carried in the aircraft's 463L cargo handling system, which consists of rows of conveyor rollers and guidance/restraint rails designed to interface with the pallets/platforms. Airdrop cargo is loaded on airdrop platforms or plywood skidboards. Most aircraft are equipped with a cargo winch to assist in loading of wheeled and palletized cargo.

**5.4.4.1 Shoring.** Standard sized lumber and plywood are both used to shore aircraft loads. Shoring is used to protect the aircraft floor, distribute cargo load over a larger area of aircraft floor (and substructure), and, on occasion, to reduce the ramp-angle during vehicle loading (see MIL-HDBK-1791). The shipper is responsible for any required shoring; it is not provided by the Air Force. Systems should be designed to minimize the requirements for shoring to limit the future logistics burden during air movement and minimize volume of solid waste generated.

**5.4.4.2 463L cargo handling system.** This is the standard military air cargo system. The 463L cargo system includes aircraft specific equipment and airfield material handling equipment (MHE). The 463L cargo pallet is a major part of the system. The 10,000-pound (4535 kg) capacity 463L pallet has a flat aluminum deck ~84" by ~104" (~2.1 m by ~2.6 m) (88" by 108" (2.2 m X 2.7 m) overall including fixed locking lugs). The 2.25-inch (57 mm) thick 463L pallets can be connected together to accommodate longer items. This pallet is compatible with some commercial cargo systems. Loading of the pallet into the aircraft is accomplished with a roller floor equipped K-loader. This vehicle includes an adjustable cargo deck to match the height of the aircraft deck. Because aircraft deck heights vary, straight-in loading of palletized cargo from standard cargo vehicles is typically not possible.

**5.4.5 Air transport by DOD controlled aircraft.** Equipment requiring air transport by DOD operated or leased aircraft (Civil Reserve Air Fleet (CRAF) or other) shall be designed to meet the weight, size, and restraint (tiedown) limitations of the specified aircraft. The aircraft that make up the long-range portion of CRAF are the wide-body B-747 and DC-10 and the narrow-body DC-8.

**5.4.5.1 AMC and CRAF fixed-wing aircraft.** Items that approach aircraft capacity limits in size, weight, ramp angle or other loading consideration shall be reviewed by the USAF Aeronautical Systems Center (ASC) as required by AFR 80-18. A successful review results in certification for internal air delivery. The ASC review can lead to an aircraft test loading of the item to support the certification for internal air delivery. A listing of certified items is maintained by ASC and made available to Air Mobility Command (AMC) aircraft loadmasters with memorandums detailing any special loading considerations. Items requiring frequent airlift and involving complex loading procedures are documented and published by AMC in the specific AMC aircraft loading manual (TO-1C-XX-9).

**5.4.5.2 AMC fixed-wing aircraft characteristics.** Figure 23 (page 57-58) and figure 24 (page 59-60) give dimensional and payload characteristics for various AMC fixed-wing aircraft. Detailed information on aircraft floor strength and ramp restrictions including overhang and projection limits is included in MIL-HDBK-1791. Restraint criteria for AMC fixed-wing air transport are also contained in this document.

**5.4.5.3 AMC fixed-wing aircraft deployability.** The maximum aircraft payloads are not the anticipated payloads that would be used during strategic deployment. Deployment payloads depend upon the mission range and flight conditions encountered. A range of 3200 nautical miles (nm) is required to support efficient worldwide deployment. Flight conditions that reduce aircraft payload include runway lengths and winds encountered. To ensure deployment analyses reflect real-world deployment conditions in most operational scenarios, the payloads that should be used for the C-141, C-17 and C-5 are 60,000 pounds (27 200 kg), 130,000 pounds (58 900 kg), and 178,000 pounds (80 700 kg), respectively. While reduced range will allow increased payload, other factors (ground time for intermediate stops and the potential for mission abort at intermediate airfields, and less direct routing) result in reduced air fleet throughput.

**5.4.5.4 Navy and Marine Corps fixed-wing aircraft.** General design guidance, based on aircraft capacity limits, is given in Tables 16 -18 (pages 61-63).

**5.4.5.5 Army fixed-wing aircraft.** General design guidance, based on aircraft capacity limits, is given in Tables 19-21 (63-64).

**5.4.6 Modeling and simulation for fixed-wing aircraft.** For air transport, 3D modeling supports analysis verifying the fit of equipment within an aircraft. Multibody dynamic analysis allows simulation of ramp cresting and loading interference with aircraft structure.

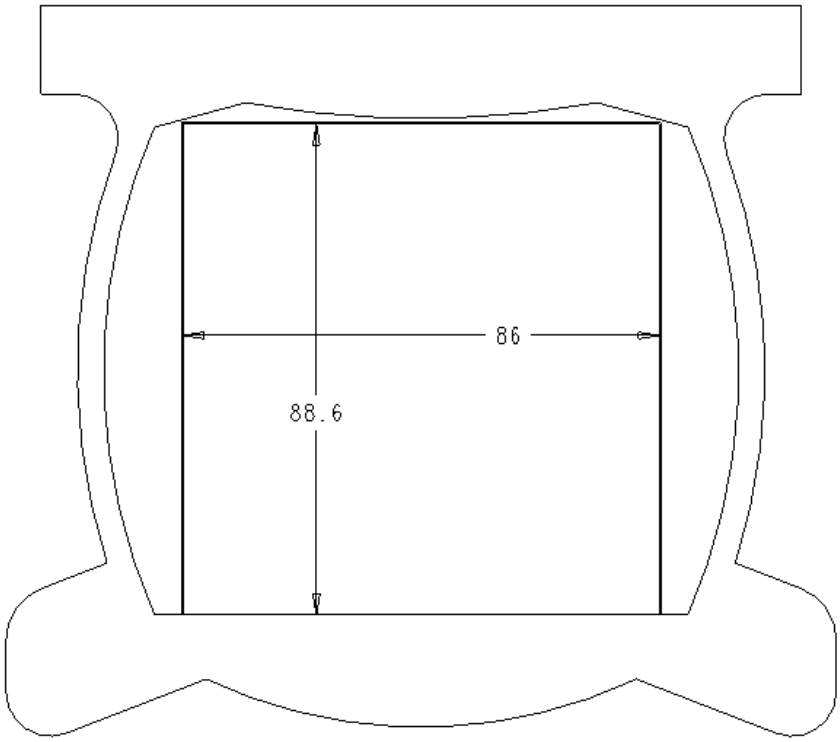


**C-27 Cross-section**

**NOTE:**
**ALL DIMENSIONS IN INCHES**

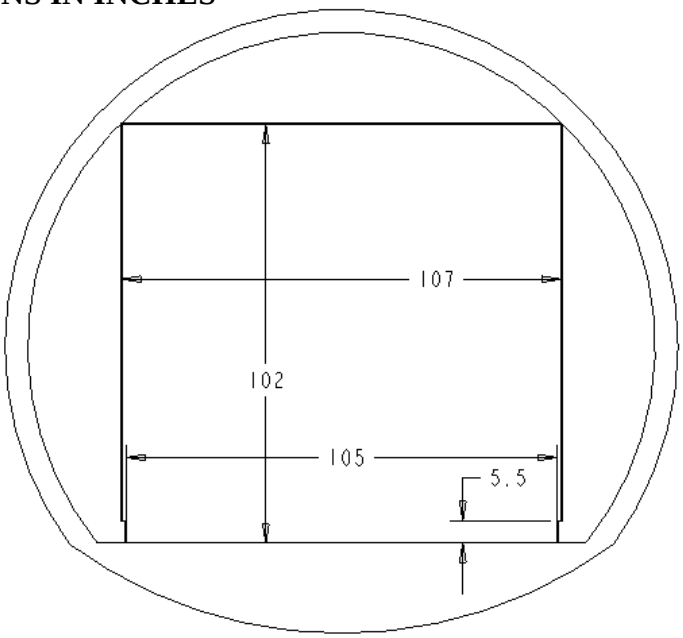


**C-130 Cross-section**

**FIGURE 23. C-27/130/141 cross-sections.**

**NOTE:**
**ALL DIMENSIONS IN INCHES**

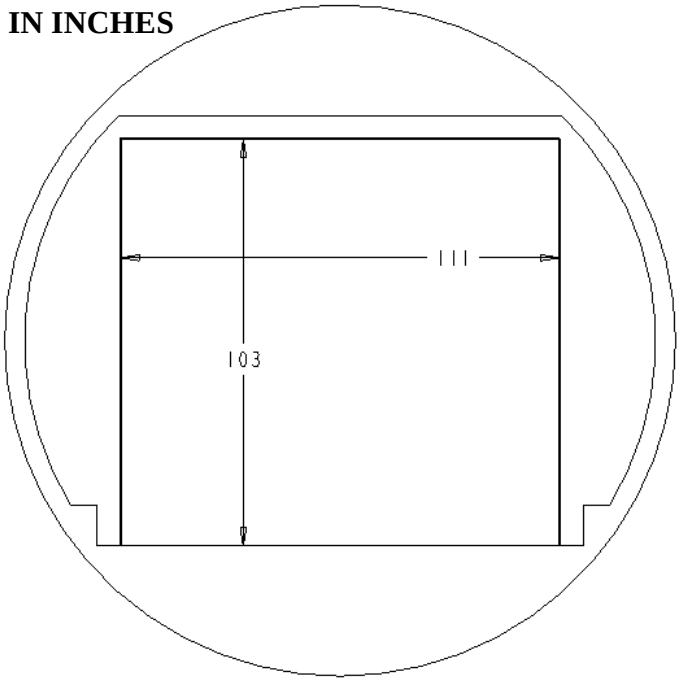


**C-141 Cross-section**

| Aircraft | Cargo Compartment Dimensions (inches, m)[1] | | | Aircraft Capabilities [2] | |
|---|---|---|---|---|---|
| | Length | Width | Height | ACL for 3,200 nm (lb, kg) | Range (nm) w/max ACL (lb, kg) [3] |
| C-27 | 337<br>8.5 | 86<br>2.2 | 88.6<br>2.2 | N/A [4] | 700/20,000<br>700/9070 |
| C-130 E/H | 480<br>12.5 | 105<br>2.7 [5] | 102<br>2.6 | 15,000<br>6804 | 1,250/42,000<br>1,250/19 050 |
| C-141 | 1090<br>28.3 | 111<br>2.8 | 103<br>2.6 | 60,000<br>27 200 | 2,000/90,000 [6]<br>2,000/40 800 |

[1] Dimensions allow for 6-inch (152 mm) clearance top and both sides. Length dimension does not include usable ramp area (fore and aft on C-5). Compliance with these dimensions does not guarantee an item will be certified for transport in an AMC aircraft. See MIL-HDBK-1791 for details.

[2] Refer to AF Pamphlet (AFP) 10-1403 and MIL-HDBK-1791 for detailed aircraft limits.

[3] Published Allowable Cabin Load (ACL). Range based on still air, one-way, and flying at best altitude/cruise speed. It is very rare for the aircraft to fly with these ACLs. These ACLs are included for information only and should not be used for design purposes.

[4] 2,800 nm max range.

[5] Between C-130 fuselage stations 477 and 617 the maximum allowable width is 99 inches (2.5 m) to open a safety aisle for crew passage.

[6] 68,600 pounds maximum peacetime ACL.

**FIGURE 23. C-27/130/141 cross-sections - Continued.**

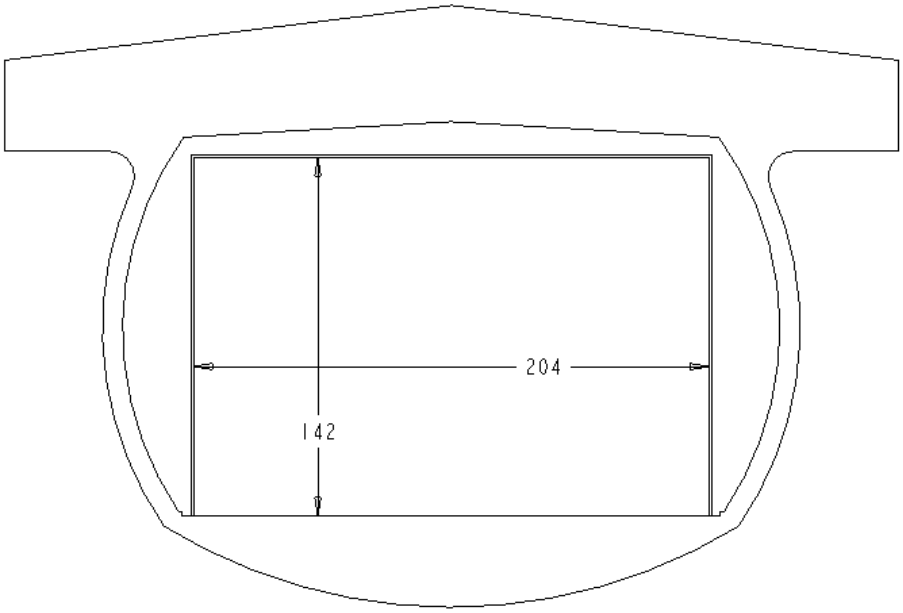


FS381-971

**NOTE:**
**ALL DIMENSIONS IN INCHES**

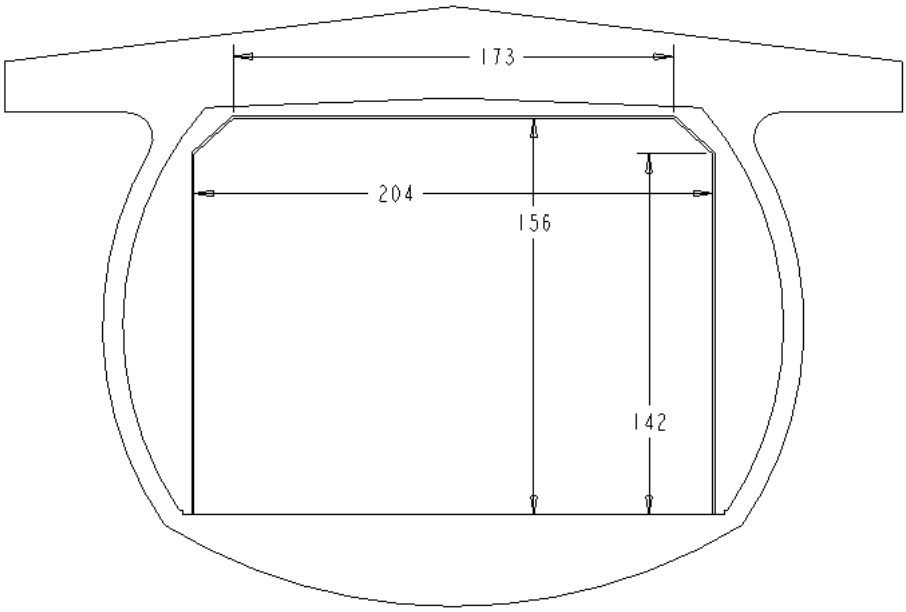


FS971-1165

**C-17 Cross-sections**

**FIGURE 24. C-17 and C-5 cross-sections.**

**NOTE:**
**ALL DIMENSIONS IN INCHES**

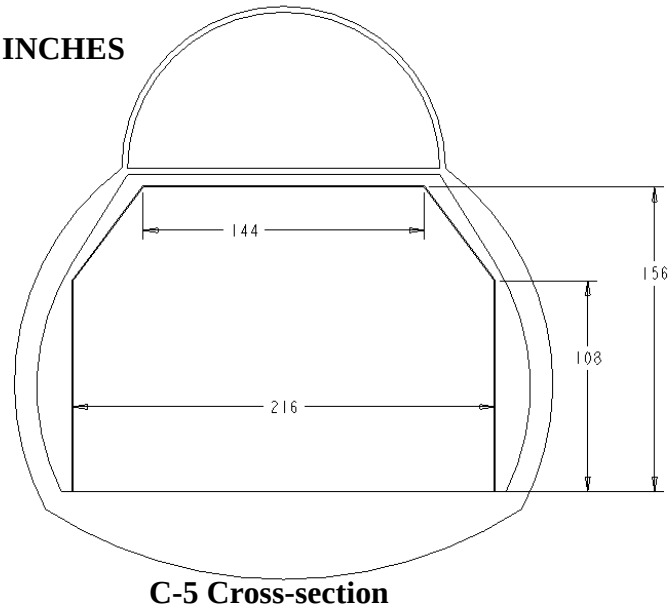


**C-5 Cross-section**

| Aircraft | Cargo Compartment Dimensions (inches, m)[1] | | | Aircraft Capabilities [2] | |
|---|---|---|---|---|---|
| | Length | Width | Height | ACL for 3,200 nm (lb, kg) | Range (nm) w/max ACL (lb, kg) [3] |
| C-17<br>cargo deck | 784<br>19.9 | 204<br>5.2 [4] | 142 to 156<br>3.6 to 4.0 [5] | 130,000<br>58 900 | 2,300/170,000<br>2,300/77,100 |
| C-17<br>ramp | 238<br>6.0 | 204<br>5.2 | 127<br>3.2 | 40,000 [6]<br>18 144 | 40,000 [6]<br>18 144 |
| C-5<br>cargo deck | 1,454<br>36.9 | 216<br>5.4 | 156<br>3.9 | 178,000<br>80 700 | 1,600/265,000<br>1,600/120,200 |
| C-5<br>fwd ramp | 116<br>2.9 | 216<br>5.4 | 142<br>3.6 | 15,000 [6]<br>6804 | 15,000 [6]<br>6804 |
| C-5<br>aft ramp | 155<br>3.9 | 216<br>5.4 | 142<br>3.6 | 15,000 [6]<br>6804 | 15,000 [6]<br>6804 |

[1] Dimensions allow for 6-inch (152 mm) clearance top and both sides. Length dimension does not include usable ramp area (fore and aft on C-5). Compliance with these dimensions does not guarantee an item will be certified for transport in an AMC aircraft. See MIL-HDBK-1791 for details.

[2] Refer to AF Pamphlet (AFP) 10-1403 and MIL-HDBK-1791 for detailed aircraft limits.

[3] Published Allowable Cabin Load (ACL). Range based on still air, one-way, and flying at best altitude/cruise speed. It is very rare for the aircraft to fly with these ACLs. These ACLs are included for information only and should not be used for design purposes.

[4] Front section of cargo deck is only 116 inches (2.9 m). This portion has been excluded from the 784 inch length.

[5] the height of the cargo deck is 142 inches forward of the wing box and 156 inches aft of the wing box.

[6] Maximum load allowed on ramp during flight, independent of range. Ramp payload is part of maximum aircraft payload.

**FIGURE 24. C-17 and C-5 cross-sections - Continued.**

**TABLE 16. Navy/Marine Corps fixed-wing cargo aircraft capabilities .**

| Aircraft | Flight Conditions | Take-off Weight (lb, kg)) | JP-5 Fuel Internal/ [External] (lb, kg) | Payload (lb, kg) | Still-Air Range [4] (Nautical Miles) |
|---|---|---|---|---|---|
| C-2A(R) [1] Cargo Cage | Basic Cargo Mission | 54,354<br>24 650 | 12,400/[N/A]<br>5600/[N/A] | 7,240<br>3300 | 1,350 |
| C-2A(R) Without Cargo Cage | Max. Payload Mission | 54,354<br>24 650 | 9,400/[N/A]<br>4250/[N/A] | 10,000<br>4530 | 950 |
| KC-130R | Max. Payload 2.5 Load Factor (LF) [2] | 155,000<br>70 300 | 47,328/[0]<br>21 500/[0] | 34,965<br>15 860 | 3,000 |
| KC-130R | Max. Fuel 2.5 LF | 155,000<br>70 300 | 47,328/<br>[15,592]<br>21 500/[7100] | 19,373<br>8800 | 4,500 |
| KC-130R | Max. Payload (Overload) 2.25 LF | 175,000<br>79 379 | 47,328/<br>[9,965]<br>21 500/[4500] | 45,000<br>20 400 | 3,500 |
| C-9B | 8 463L Pallets | 110,000<br>49 895 | 18,215/[N/A]<br>8260/[N/A] | 32,444<br>14 700 | 1,000 |
| C-9B | 6-1/2 463L Pallets [3] | 110,000<br>49 895 | 27,779/[N/A]<br>12 600/[N/A] | 22,880<br>10 400 | 1,900 |

[1] Re-procurement C-2A Carrier Onboard Delivery (COD) Aircraft. The cargo cage consists of structural members, that when installed, provide a solid structural envelope within the cabin compartment. The cargo cage retains cargo to the ultimate load limits of the aircraft.

[2] Flight maneuver "G" limit

[3] Half-size 463L pallet: 54" x 88" (1.4 m X 2.2 m)

[4] Standard day flight conditions, best cruise altitude

**TABLE 17. Design constraints for Navy/Marine Corps fixed-wing aircraft .**

| Aircraft | Cargo Opening | | Cargo Compartment | | | |
|---|---|---|---|---|---|---|
| | Width (in., m) | Height (in., m) [1] | Length (in., m) | Width (in., m) | Height (in., m) | Floor Load ($lb/ft^2$, kPa) [3] |
| C-2A Rear Ramp [2] | 88/66<br>2.2/1.6<br>[Floor/ Top] | 65<br>1.6 | 325<br>8.2 | 86<br>2.1 | 63<br>1.6 | 300<br>14.3 |
| KC-130R Rear Ramp | 120<br>3.0 | 106<br>2.7 | 492<br>12.4 | 120<br>3.0 | 106<br>2.6 | 50 psi<br>340 kPa<br>Local Pressure |
| C-9B Side Door | 136<br>3.5 | 80<br>2.0 | 725<br>18.4 | 115<br>2.9 | 80<br>2.0 | 300<br>14.3 |
| C-12B Side Door | 52<br>1.3 | 52<br>1.3 | 156<br>3.9 | 48<br>1.2 | 40<br>1.0 | 200<br>9.5 |

[1] Airframe dimensions. Side and top clearance is required. For C-9 and C-130 allow 6 in. (152 mm) at top and 5 in. (127 mm) on both sides. For C-2 and C-12 allow 6 in. (152 mm) at top and 10 in. (254 mm) on one side (for crew passage) and 5 in. (127 mm) on the other side.

[2] When C-2 "cargo cage" is installed use: 83/57 in. (2.1 m/1.4 m) (floor-line/ top) and 63 in. (1.6 m) for opening height.

[3] Structural floor load limit for entire cargo compartment. See specific aircraft NATOPS Flight Manual and/or Cargo Loading manual.

**TABLE 18. Crash restraint criteria for Navy/Marine Corps fixed-wing aircraft .**

| Aircraft | Crash Load Restraint Criteria [1] | | | | |
|---|---|---|---|---|---|
| | Fwd G's | Aft G's | Lateral G's | Up G's | Down G's |
| C-2A | 20 | 7 | 7 | 4 | 10 |
| C-9B | 9 | 1.5 | 1.5 | 3 | 2 |
| C-12B | 9 | 1.5 | 1.5 | 3 | 3 |
| KC-130R | 8 | 4 | 1.5 | 4 | 4.5 |

[1] Crash restraint is based on tiedown provision strength (ultimate load) and additional tiedown lashing to item hard-points. Cargo nets are also used, when appropriate, on small items.

**TABLE 19. Army fixed-wing cargo aircraft capabilities .**

| Aircraft | Take Off Weight (lb, kg) | Fuel Burn (lb, kg) [1] | Payload (lb, kg) [2] | Still-Air Range (nautical miles) [3] |
|---|---|---|---|---|
| C-12 | 12,500<br>5700 | 2,000<br>900 | 2,000<br>900 | 880 |
| C-23A | 22,900<br>10 400 | 1,600<br>725 | 4,950<br>2200 | 400 |
| C-23B | 25,600<br>11 600 | 1,990<br>900 | 7,280<br>3300 | 500 |

[1] JP-4, Max range speed.
[2] Max cargo weight.
[3] Standard day flight conditions 10,000 ft.

**TABLE 20. Design constraints for Army fixed-wing aircraft .**

| Aircraft | Cargo Opening | | Cargo Compartment | | | |
|---|---|---|---|---|---|---|
| | Width (in., m) | Height (in., m) | Length (in., m) | Width (in., m) | Height (in., m) | Floor Load (lb/ft$^2$, kPa) |
| C-23A<br>Rear Ramp | 63<br>1.6 | 75<br>1.9 | 296<br>7.5 | 701<br>17.8 | 75<br>1.9 [1] | Varies [3] |
| C-23B<br>Rear Ramp<br><br>Cargo Door [2] | <br>70<br>1.7<br>55<br>1.3 | <br>75<br>1.9<br>65<br>1.6 | <br>306<br>7.7<br>50<br>1.2 | <br>67<br>1.7<br>65<br>1.6 | <br>75<br>1.9<br>60<br>1.6 | Varies [3] |
| C-12<br>Side Door | 52<br>1.3 | 52<br>1.3 | 167<br>4.2 | 54<br>1.3 | 57<br>1.4 | 200<br>9.5 [4] |

[1] Airframe dimensions. For C-23 and C-12 allow 6 in. (152 mm) at top and 10 in. (254 mm) on one side (for crew passage) and 5 in. (127 mm) on the other side. When C-23 has cargo rollers installed, use 72.5 inches (1.8 m) for the compartment height.

[2] The left-side crew door can be used to load cargo. (On the C-23A this door is partially blocked by the flight mechanic seat.)

[3] Floor structural capacity in main cabin varies from 125 to 150 lbs./ft$^2$ (5.99 - 7.18 kPa). See flight manual for detailed loading limits.

[4] Floor structural load limit for cargo placed on the seat tracks. Use 100 lbs./ft$^2$ (4.79 kPa) for cargo placed on cabin decking.

**TABLE 21. Crash restraint criteria for Army fixed-wing aircraft .**

| Aircraft | Crash Load Restraint Criteria [1] | | | | |
|---|---|---|---|---|---|
| | Fwd G's | Aft G's | Lateral G's | Up G's | Down G's |
| C-12 | 9 | 1.5 | 1.5 | 3 | 3 |
| C-23A | 9 | 1.5 | 4 | 3 | 6 |
| C-23B | 9 | 1.5 | 4 | 3 | 6 |

[1] Crash restraint is based on tiedown provision strength (ultimate load) and additional tiedown lashing to item hard-points. Cargo nets are also used, when appropriate, on small items.

## 5.5 Air delivery by Low Velocity Airdrop (LVAD).

**5.5.1 General.** LVAD (i.e., ~28 ft/sec 8.5 m/sec parachute retarded descent) is used to support mass assault or resupply military operations. The C-130, C-141, C-5 and C-17 aircraft have airdrop capabilities. Energy-dissipating material placed between the item and the airdrop platform (see 5.5.3 on page 66) mitigates landing shock. Rigged load height (item, cushioning material and airdrop platform) vary with aircraft type and is shown in table 22 (page 65). Acceptable item height also varies with equipment type and is shown in table 23 (page 65). Maximum gross rigged weights (GRW) for LVAD are shown in table 24 (page 66). For equipment design purposes, the maximum allowable item weights for LVAD are shown in table 25 (page 66). Actual weight allowed may vary based on final rigging procedures.

**TABLE 22. LVAD rigged load height .**

| | C-130/C-141 (in., m) | C-5 (in., m) | C-17 (in., m) |
|---|---|---|---|
| Height [1] (in.) | 100<br>2.5 | 105<br>2.6 | 118<br>2.9 |
| Width (in.) | 108<br>2.7 | 108<br>2.7 | 126<br>3.2 |

[1] Rigged load height is further restricted forward of the item's center of gravity to allow extraction under malfunction conditions (i.e., extraction parachute fails to fully deploy). Tip-off curves that establish these limits are in MIL-HDBK-1791.

**TABLE 23. LVAD acceptable item height .**

| | C-130/C-141 (in., m) | C-5 (in., m) | C-17 (in., m) |
|---|---|---|---|
| Height [1] (in.) | 90<br>2.2 | 95<br>2.4 | 108<br>2.7 |
| Height [2] (in.) | 84.5<br>2.1 | 89.5<br>2.2 | 102.5<br>2.6 |

[1] Allowable height for items (vehicles) with suspension systems (rubber tires and/or springs).
[2] Allowable height for all other items (bulk, skid-based, etc.).

**TABLE 24. Maximum gross rigged weights for LVAD .**

| C-130 (lb, kg) | C-141 (lb, kg) | C-5 (lb, kg) | C-17 (lb, kg) |
|---|---|---|---|
| 42,000<br>19 000 | 38,500<br>14 200 [1] | 60,000<br>27 200 | 60,000<br>27 200 |
| [1] Increases to 42,000 lb (19 000 kg) during contingencies. | | | |

**TABLE 25. Maximum allowable item weights for LVAD .**

| C-130 (lb, kg) | C-141 (lb, kg) | C-5 (lb, kg) | C-17 (lb, kg) |
|---|---|---|---|
| 34,200<br>15 500 | 31,270<br>14 200 | 34,200<br>15 500 | 49,500<br>22 500 |
| Allowable item weight is based on the above GRWs and the formula:<br>Item weight (lb) = (GRW - 1600)/1.18 | | | |

**5.5.2 LVAD criteria.** MIL-HDBK-669, MIL-STD-814 and MIL-HDBK-1791 provide further detailed airdrop criteria.

**5.5.3 Airdrop platform.** The airdrop platform is similar to the 463L cargo pallet. An airdrop platform is 108 inches (2.7 m) wide (across the locking lugs) and is assembled in lengths ranging from 8 to 32 feet (2.4 to 9.7 m), in 4-foot (1.2 m) increments.

**5.5.4 Modeling and simulation for airdrop.** For airdrop, structural analysis allows the assessment of tiedown, parachute extraction, and lifting provisions.

**5.6 Rotary-wing air transport.**

**5.6.1 General.** Rotary-wing aircraft (helicopters) are used mainly for short-range, tactical missions. Cargo is transported either internally or suspended externally beneath the aircraft by special helicopter slings. Each helicopter has a published maximum payload rating based on optimum flight conditions. However, mission specifics and other factors will likely reduce actual flyable payload.

US military cargo helicopters:

Army cargo helicopters:
- UH-1D/UH-1N (Bell)
- UH-60A/UH-60L/MH-60K (Sikorsky)
- CH-47D (Boeing)
- MH-47E (Boeing)

Navy cargo helicopters:
- UH-1N (Bell)
- SH-2G* (Kaman)
- SH-3 (Sikorsky)
- SH-60B/SH-60F/HH-60H (Sikorsky)
- CH-60 (Sikorsky, may replace CH-46E)
- CH-46E (Boeing)
- CH-53D/CH-53E (Sikorsky)

*Mainly External-cargo.

US Coast Guard cargo helicopters:
- HH-60J (Sikorsky)

Marine Corps cargo helicopters:
- UH-1N (Bell)
- CH-46D/CH-46E (Boeing)
- CH-53D/CH-53E (Sikorsky)
- MV-22* (tilt-rotor, Bell-Boeing)

*Operational ~2001

Air Force cargo helicopters:
- UH-1N (Bell)
- HH-60D/MH-60G (Sikorsky)
- CV-22* (tilt-rotor, Bell-Boeing)

*Operational ~2005

**5.6.2 Internal helicopter transport.** Tables 26-31 (pages 68-71) give design limits on weight and dimensions for equipment intended for transport within Army and Navy/Marine Corps cargo helicopters. NATICK (see 5.6.4 on page 72) certifies equipment for internal transport on Army helicopters. Figure 25 (page 72) shows the tiedowns on the UH-1.

**TABLE 26. Design constraints for Army rotary-wing aircraft .**

| Helicopter | Cargo Dimensions [1] | | | Cargo Compartment [2] | | | |
|---|---|---|---|---|---|---|---|
| | Location | Width (in., m) | Height (in., m) | Length (in, m.) | Width (in., m) | Height (in., m) | Floor Load Limits ($lb/ft^2$, kPa) |
| UH-1H | Each Side | 74/92<br>1.8/2.3 [3] | 49<br>1.2 | 82<br>2.0 [4] | 77<br>1.9 [4] | 46<br>1.1 | 100<br>4.7 |
| UH-60 A/L/K | Each Side | 68<br>1.7 | 52<br>1.3 | 127.5<br>3.2 [5] | 50<br>1.2 [5] | 46<br>1.1 | 300<br>14.3 |
| CH-47 D/E | Rear Ramp | 90<br>2.2 | 78<br>1.9 | 331<br>8.4 | 80<br>2.0 | 72<br>1.8 | 300<br>14.3 [6] |

[1] Dimensions allow a 5-inch (127 mm) clearance inside the centerline of the perimeter tiedown fittings. Height dimensions allow about 5-inches (127 mm) of clearance over cargo.

[2] Airframe dimensions.

[3] Sliding-door only/both side doors open.

[4] See figure 25 (page 72) for details of usable floor space.

[5] Usable cargo area is reduced to 92" long by 46" wide (2.3 m by 1.1 m) when door gunners are needed.

[6] Up to 2,500 $lbs/ft^2$ (119 kPa) on the treadways.

**TABLE 27. Crash restraint criteria for Army rotary-wing aircraft .**

| Helicopter | Crash Load Restraint Criteria [1] | | | | |
|---|---|---|---|---|---|
| | Fwd G's | Aft G's | Lateral G's | Up G's | Down G's |
| UH-1H | 8 | 8 | 8 | 4 | 8 |
| UH-60 A/L/K | 12 | 3 | 8 | 3 | - |
| CH-47 D/E | 4 | 2 | 1.5 | 2 | 4 |

[1] Crash restraint is based on tiedown provision strength (ultimate load) and additional tiedown lashing to item hard-points. Cargo nets are also used, when appropriate, on small items.

**TABLE 28. Design constraints for Navy/Marine Corps rotary-wing aircraft .**

| Helicopter | Cargo Dimensions | | | Cargo Compartment [1] | | | |
|---|---|---|---|---|---|---|---|
| | Location | Width (in., m) | Height (in., m) | Length (in., m) | Width (in., m) | Height (in., m) | Floor Load Limits [2] (lbs/ft$^2$, kPa) |
| SH-3G | Each side | 68<br>1.7 | 60<br>1.5 | 231<br>5.8 | 76<br>1.9 | 71<br>1.8 | 300<br>14.3 |
| SH-60 B/F/H | Each side | 44<br>1.1 | 54<br>1.3 | 130<br>3.3 | 73<br>1.8 | 54<br>1.3 | 225<br>10.7 [3] |
| CH-46 D/E | Rear Ramp | 70<br>1.7 | 69<br>1.7 | 290<br>7.3 | 72<br>1.8 | 69<br>1.7 | 300<br>14.3 |
| CH-53 D/E | Rear Ramp | 96<br>2.4 | 77<br>1.9 [4] | 450<br>11.4 | 90<br>2.2 | 77<br>1.9 | 300<br>14.3 |
| MH-53E | Rear Ramp | 96<br>2.4 | 77<br>1.9 [5] | 450<br>11.4 | 90<br>2.2 | 77<br>1.9 | 300<br>14.3 |
| MV-22 | Rear Ramp | 68<br>1.7 | 62<br>1.6 | 250<br>6.3 | 66<br>1.7 | 60<br>1.5 | 300<br>14.3 |

[1] Airframe dimensions. Clearance required: 6 inches (152 mm) at top, 10 inches (254 mm) (minimum) on one side (for crew passage), and 5 inches (127 mm) on the other side.

[2] Floor load limits are for distributed loads only Refer to the specific aircraft NATOPS Flight Manual and/or Cargo Loading Manual for concentrated load limits.

[3] On SH-60F and HH-60H allowable floor loading varies from 75 lbs/ft$^2$ (3.59 kPa) in the forward cabin to 300 lbs/ft$^2$ (14.36 kPa) in the aft cabin. See specific aircraft NATOPS Flight Manual and/or Cargo Loading manual.

[4] Mine Counter Measure (MCM) equipment reduces available height in aft cabin to 58 inches (1.47 m). See aircraft NATOPS Manuals.

[5] Single-point cargo hook reduces height 2-4 inches (50 - 100 mm). See aircraft NATOPS Manuals.

**TABLE 29. Crash restraint criteria for Navy/Marine Corps rotary-wing aircraft .**

| Helicopter | Crash Load Restraint Criteria [1] | | | | |
|---|---|---|---|---|---|
| | Fwd G's | Aft G's | Lateral G's | Up G's | Down G's |
| SH-3G | 8 | 4 | 4 | 4 | 4 |
| S/HH-60 B/F/H | 8 | 4 | 4 | 4 | 8 |
| CH-46 D/E | 10 | 7.5 | 3 | 3 | 10 |
| CH-53 D/E | 10 | 7.5 | 3 | 3 | 10 |
| MV-22 | 16 [2] | 5 | 10 [2] | 5 | 16 |

[1] Crash restraint is based on tiedown provision strength (ultimate load) and additional tiedown lashing to item hard-points. Cargo nets are also used, when appropriate, on small items.

[2] Dynamic restraint for maximum controlled displacement of cargo. See Cargo Loading Manual A1-V22AB-CLG-000.

**TABLE 30. Army rotary-wing aircraft internal load capabilities for 30 nautical mile radius misson .**

| Helicopter [1] | Sea level, 60F lb, kg | 2,000 ft, 70F lb, kg | 4,000 ft, 95F lb, kg |
|---|---|---|---|
| UH-1H | 2,600, 1170 | 2,600, 1170 | 1,150, 520 |
| UH-60A | 8,050, 3650 | 7,500, 3400 | 4,850, 2190 |
| UH-60L | 8,450, 3800 | 8,500, 3850 | 6,950, 3150 |
| MH-60K | 6,900, 3100 | 6,100, 2760 | 3,400, 1540 |
| CH-47D | 23,300, 10 500 | 23,350, 10 500 | 16,900, 7660 |
| MH-47E | 21,250, 9600 | 19,750, 8950 | 16,900, 7660 |

[1] Mission:
- -Warm-up, 8 min. @ idle power.
- -Take-off/hover out-of-ground-effect 1 min @ T/O power.
- -Cruise @ 100 KTAS for 30 nautical miles.
- -Hover out-of-ground-effect 1 min.
- -Land/offload payload.
- -Return 30 nautical miles @ best range speed.
- -Land with 20 min reserve fuel.

**TABLE 31. Navy/Marine Corps rotary-wing aircraft internal load capabilities for 30 nautical mile radius mission.**

| Helicopter [1] | Sea level, 60F<br>lb, kg | 2,000 ft, 70F<br>lb, kg | 4,000 ft, 95F<br>lb, kg |
|---|---|---|---|
| UH-1N | 2,710<br>1230 | 2,750<br>1250 | 2,000<br>900 |
| SH-2F | 2,660<br>1200 | 2,660<br>1200 | 1,140<br>510 |
| SH-3G | 4,480<br>2030 | 2,950<br>1340 | 150<br>68 |
| SH-60B | 5,000<br>2260 | 4,500<br>2040 | 1,720<br>780 |
| SH-60F | 5,430<br>2460 | 5,060<br>2300 | 2,150<br>975 |
| HH-60H | 5,220<br>2360 | 4,750<br>2150 | 1,680<br>760 |
| CH-46E | 6,000<br>2720 | 5,600<br>2540 | 3,890<br>1760 |
| CH-53D | 14,770<br>6700 | 13,970<br>6340 | 7,910<br>3590 |
| CH-53E | 34,990<br>15 870 | 28,600<br>12 970 | 18,600<br>8430 |
| MH-53E | 30,880<br>14 000 | 23,610<br>10 700 | 13,900<br>6300 |
| MV-22 [2] | 13,850<br>6280 | 9,840<br>4450 | 8,010<br>3630 |

[1] Mission:
- -Warm-up, 8 min. @ idle power.
- -Take-off/hover out-of-ground-effect 1 min @ T/O power.
- -Cruise @ 100 KTAS for 30 nautical miles with external load.
- -Hover out-of-ground-effect 1 min.
- -Land/offload payload.
- -Return 30 nautical miles @ best range speed.
- -Land with 20 min reserve fuel.

[2] Not in service until 2001.

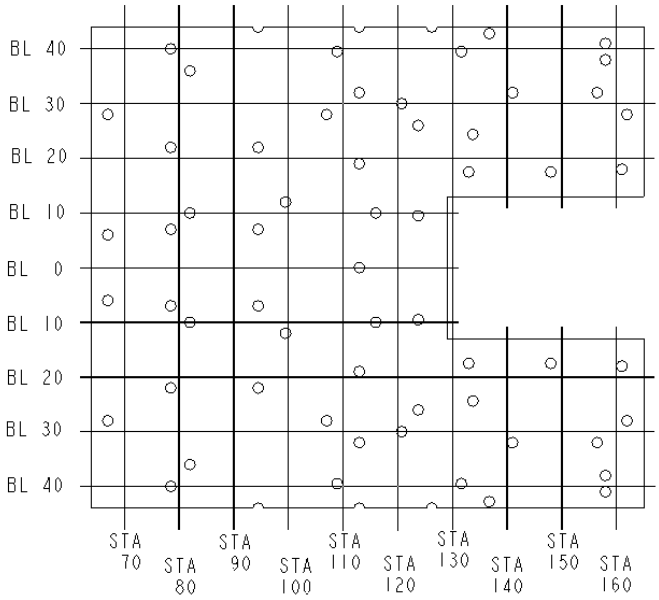


**FIGURE 25. UH-1 floor.**

**5.6.3 External helicopter transport.** Table 32 (page 73) and table 33 (page 74) give lift capabilities for Army cargo helicopters. Table 34 (page 75) covers Navy/Marine cargo helicopters. USAF helicopters have similar lift capabilities.

**5.6.4 NATICK certification.** The US Army Natick Research, Development and Engineering Center (NATICK) certifies all external helicopter sling loads (HSL) carried under DOD helicopters. Rigging uses standard sling sets adopted by each service. Spreader bars are rarely available or used and are considered only as a last resort in HSL. Contact NATICK [(508) 233-5293, DSN 256-5293] for details. In general HSL certification is based on:

a. An engineering evaluation of the proposed item's characteristics (weight/size/flight shape), slinging provision suitability (location/strength), and compliance with the criteria in MIL-STD-913.

b. Proof-load testing of the slinging provisions.

c. Static lift testing to verify sling lengths and clearances.

d. Helicopter flight testing to determine the maximum stable airspeed and demonstrate maneuver stability during flight.

**TABLE 32. Army rotary-wing aircraft external load capabilities for 30 nautical mile radius mission .**

| Helicopter [1] | Cargo Hook Limit (lb, kg) | Sea level, 59F (lb, kg) | 2,000 ft, 70F (lb, kg) | 4,000 ft, 95F (lb, kg) |
|---|---|---|---|---|
| UH-1H | 4,000<br>1814 | 2,585<br>1170 | 2,624<br>1190 | 1,169<br>530 |
| UH-60A | 9,000<br>4082 | 7,843<br>3550 | 7,302<br>3310 | 4,700<br>2130 |
| UH-60L | 9,000<br>4082 | 9,000<br>4080 | 9,000<br>4080 | 6,630<br>3000 |
| MH-60K | 9,000<br>4082 | 6,512<br>2950 | 5,640<br>2550 | 2,998<br>1350 |
| CH-47D | 26,000 (11 800) center<br>17,000 (7710) fwd/aft [2] | 23,324<br>10 580 | 23,396<br>10 610 | 16,644<br>7550 |
| MH-47E | 26,000 (11 800) center<br>17,000 (7710) fwd/aft [2] | 20,657<br>9370 | 19,171<br>8690 | 16,567<br>7510 |

[1] Mission:
- -Warm-up, 8 min. @ idle power.
- - Take-off/hover out-of-ground-effect 1 min @ T/O power.
- - Cruise @ 100 KTAS for 30 nautical miles with external load.
- -Hover out-of-ground-effect 1 min.
- -Offload payload.
- -Return 30 nautical miles @ best range speed.
- -Land with 20 min reserve fuel.

[2] Tandem-hook single item weight limit: 25,000 lbs.

**TABLE 33. Army rotary-wing aircraft external load capabilities for maximum range mission .**

| Helicopter [1] | Sea level, 59F | | 2,000 ft, 70F | | 4,000 ft, 95F | |
|---|---|---|---|---|---|---|
| | Payload (lb, kg) | Range (nm) | Payload (lb, kg) | Range (nm) | Payload (lb, kg) | Range (nm) |
| UH-1H | 1,860<br>840 | 95 | 1,860<br>840 | 105 | 354<br>160 | 119 |
| UH-60A | 6,426<br>2910 | 113 | 5,832<br>2640 | 121 | 3,156<br>1430 | 136 |
| UH-60L | 8,490<br>3850 | 102 | 7,900<br>3580 | 108 | 5,173<br>2340 | 120 |
| MH-60K | 5,229<br>2370 | 94 | 4,306<br>1950 | 100 | 1,591<br>720 | 110 |
| CH-47D | 19,089<br>8650 | 129 | 19,089<br>8650 | 133 | 12,187<br>5525 | 144 |
| MH-47E | 17,516<br>7940 | 100 | 16,170<br>7330 | 100 | 13,659<br>6190 | 100 |
| MH-47E [2] | 9,658<br>4380 | 284 | 8,077<br>3660 | 291 | 5,425<br>2460 | 306 |

[1] Mission:
- -Warm-up, 8 min. @ idle power.
- Take-off/hover out-of-ground-effect 1 min @ T/O power.
- Cruise @ 100 KTAS for given range with external load.
- Hover out-of-ground-effect 1 min.
- Offload payload.
- Return @ best range speed.
- Land with 20 min reserve fuel.
- With range-extension tanks.

[2] With range-extension tanks.

**TABLE 34. Navy/Marine Corps rotary-wing aircraft external load capabilities for 30 nautical mile radius mission.**

| Helicopter [1] | Cargo Hook Limit (lb, kg) | Sea level, 60F (lb, kg) | 2,000 ft, 70F (lb, kg) | 4,000 ft, 95F (lb, kg) |
|---|---|---|---|---|
| CH-53E | 36,000<br>16 325 | 34,770<br>15 770 | 28,300<br>12 830 | 18,200<br>8250 |
| MH-53E | 36,000<br>16 325 | 30,700<br>13 925 | 23,300<br>10 560 | 13,500<br>6120 |
| CH-53D | 20,000<br>9070 | 14,700<br>6670 | 13,900<br>6300 | 7,860<br>3560 |
| MV-22 [2] | 15,000 [3]<br>6800 | 13,320<br>6040 | 9,330<br>4230 | 7,500<br>3400 |
| CH-46E | 10,000<br>4530 | 5,915<br>2680 | 5,480<br>2480 | 3,780<br>1710 |
| HH-60H | 6,000<br>2720 | 5,100<br>2310 | 4,625<br>2090 | 1,565<br>700 |
| SH-60F | 6,000<br>2720 | 5,290<br>2400 | 4,925<br>2230 | 2,000<br>900 |
| SH-60B | 6,000<br>2720 | 4,900<br>2220 | 4,370<br>1980 | 1,610<br>730 |
| UH-1N | 5,000<br>2260 | 2,650<br>1200 | 2,680<br>1210 | 1,950<br>880 |
| SH-3G | 4,335<br>1960 | 2,850<br>1290 | 2,475<br>1120 | 95<br>43 |
| SH-2F | 4,000<br>1810 | 2,500<br>1130 | 2,475<br>1120 | 1,000<br>450 |

[1] Mission:
- Warm-up, 8 min. @ idle power.
- Take-off/hover out-of-ground-effect 1 min @ T/O power.
- Cruise @ 100 KTAS for 30 nautical miles with external load.
- Hover out-of-ground-effect 1 min.
- Offload payload.
- Return 30 nautical miles @ best range speed.
- Land with 20 min reserve fuel.

[2] Not in service until 2001.

[3] Tandem hook single item weight limit: 10,000 lb (4536 kg)

In general NATICK internal air transport certification is based on:

a. An engineering evaluation of the proposed item's characteristics (weight/size) and tiedown provision suitability (location/strength).

b. Proof-load testing of the tiedown provisions.

c. Validation test loading to verify tiedown and clearances.

**5.6.5 Modeling and simulation for rotary-wing transport.** For Rotary-wing aircraft, 3D modeling allows analysis of sling procedures to determine sling contact with the transported equipment. Structural analysis of points of sling contact supports equipment design preventing structural damage from sling contact.

**5.7 Lifting and tiedown provisions.**

**5.7.1 General guidance.** New items of equipment, reprocurements of existing equipment, and modified equipment that meet the definition of a transportability problem item shall have lifting, tiedown, and for cargo carrying equipment, cargo tiedown provisions meeting the requirements of MIL-STD-209, *Interface Standard for Lifting and Tiedown Provisions*. MIL-STD-209 establishes dimensional limits, design considerations, positioning requirements and strength requirements to ensure military equipment can be safely and efficiently lifted or tied down for transport. The following paragraphs provide general guidance on lifting, tiedown and cargo tiedown provisions. Consult MIL-STD-209 for more detailed information on lifting and tiedown provisions.

**5.7.2 Equipment tiedown provisions.**

(1) Equipment tiedown provision strengths are based on the gross weight of the item/system.

(2) Equipment tiedown points should be located symmetrically about the item of equipment, preferably mounted on the front and rear ends, and higher than the center of gravity.

(3) Equipment tiedown provisions shall have the required strength to meet the directional load factors in MIL-STD-209. These forces are applied statically and independently. For design purposes, each tiedown provision shall be used for restraint in only one longitudinal direction, either fore or aft, and only one lateral direction, either left or right.

(4) Items/systems shall be equipped with four equipment tiedown provisions.

**5.7.3 Lifting provisions.**

(1) Required strengths for lifting provisions are based on the equipment gross weight and item's lift requirements (requirement for helicopter transport and crane lift).

(2) When locating lifting provisions the designer shall consider a range of sling angles that will be used for lifting in the field. The range to consider is as follows: Slings legs yielding a 45 degree equal length single apex sling assembly (with respect to the plane of the provisions) to those same length sling legs attached to an 8-foot by 20-foot container spreader bar. Sling legs are never less than 12 feet in length.

(3) Lifting provisions shall be located such that the item/system will not be damaged due to compressive forces exerted on the item through contact with a sling leg.

(4) Items/systems shall be equipped with four lifting provisions.

**5.7.4 Multipurpose provisions.** A single provision can be used as both an equipment tiedown provision and a lifting provision as long as the requirements of both types of provisions are met.

**5.7.5 Cargo bed and flatbed/flatrack cargo tiedown provisions.**

(1) All cargo carrying vehicles/platforms shall have cargo tiedown provisions.

(2) The number of cargo bed or flatbed/flatrack tiedown provisions shall be determined by the design and size of the cargo compartment or platform; however, no cargo compartment or platform shall have fewer than four provisions.

**5.7.6 Large cargo tiedown provisions.**

(1) Equipment with a payload capability greater than 5,000 pounds shall be equipped with four large cargo tiedown provisions.

(2) Required strength of large cargo tiedowns is based on the maximum payload rating of the cargo bed or flatbed/flatrack.

(3) A large cargo tiedown provision can be used as a substitute for a cargo bed or flatbed/flatrack cargo tiedown provision if the large cargo tiedown provision can accept 2-inch steel banding and meet the dimensional requirements of a cargo bed or flatbed/flatrack cargo tiedown provision, whichever one is being substituted.

**5.7.7 All provisions.**

(1) Provisions that can be removed are prohibited. A tiedown or lifting provision that doubles as another device, such as a towing provision, shall not be used if the secondary function requires removal of the provision.

(2) Shackles shall not be used as lifting, equipment tiedown or multipurpose provisions.

(3) Height of provisions shall be 6 feet or less, measured from the ground when the equipment is resting on a level surface, unless an integral means for reaching the provisions is provided.

(4) All lifting, tiedown, and cargo tiedown provisions shall be designed to prevent the movable parts from freezing in place during cold weather or from jamming because of accumulations of mud, paint, rust and/or infrequent use.

**5.7.8 Modeling and simulation for lifting and tiedown provisions.** For lifting and tiedown provisions, 3D models allow review of design proposals to ensure the dimensional requirements of MIL-STD-209 are met, and determine whether sling contact will occur. Structural analysis allows assessment of the provision design to establish adequacy or access the risk for testing.

**5.8 Intermodal cargo containers.**

**5.8.1 Classification and dimensions of cargo containers.** To take full advantage of the intermodal benefits of containerization, materiel should be transportable, when practical, in International organization for Standardization (ISO) Series 1 or American National Standards Institute (ANSI) containers. Capacities and dimensional characteristics of ISO containers are shown in figure 26 (page 79) and table 35 (page 80). There are other non-standard sizes of containers available in some countries, however to be capable of worldwide transport, containerized systems should utilize one of the containers listed in table 35 (page 80). Container standards require the container floor to withstand a uniformly distributed load of not less than the maximum gross weight of the container. For series 1AA, 1A, and 1C containers, the floor must withstand a wheel load of not less than 6,000 pounds (2721.55 kg) per wheel, applied to a contact area of not greater than 22 square inches (14 194 $mm^2$), assuming a wheel width of not less than 7 inches (178 mm) and a distance between wheel centers of 30 inches (762 mm).

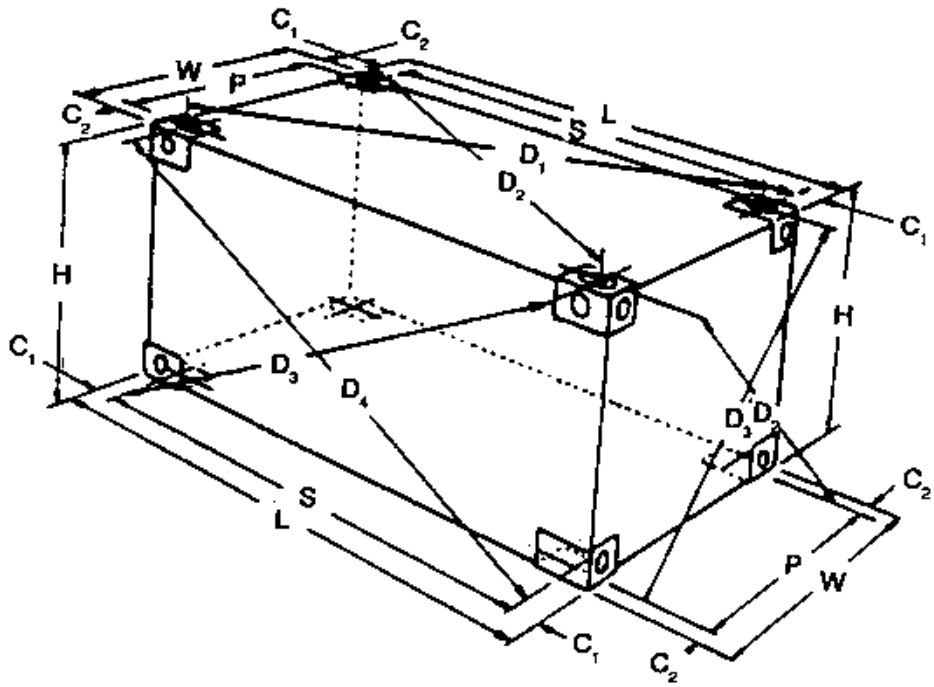


S = Length between centers of apertures in corner fittings
P = Width between centers of apertures in corner fittings
C1 = Corner fitting measurement 4 inches (105 mm)
C2 = Corner fitting measurement 3 ¾ inches (89 mm)
L = Overall External length of container
D = Distance between centers of apertures of diagonally opposite corner fittings resulting in 6 measurements: D1, D2, D3, D4, D5, and D6
K1 = Difference between D1 and D2 or between D3 and D4; i.e. K1=D1-D2 or K1 = D2-D1 or K1 = D3-D4 or K1 = D4-D3
K2 = Difference between D5 and D6; i.e. K2 = D5-D6 or D6-D5
H = Overall height

| Nominal Length (feet) | Length Overall (L) | | S | | P | | $K_1$ MAX | | $K_2$ MAX | |
|---|---|---|---|---|---|---|---|---|---|---|
| | mm | ft-in. | mm | ft-in. | mm | ft-in. | mm | in. | mm | in. |
| 40 | 12190 | 40’ 0” | 11985 | 39’ 3-7/8” | 2259 | 7’ 4-31/32” | 19 | 3/4 | 10 | 3/8 |
| 30 | 9125 | 29’ 11-1/4” | 8919 | 29’ 3-1/8” | 2259 | 7’ 4-31/32” | 16 | 5/8 | 10 | 3/8 |
| 20 | 6055 | 19’ 10-1/2” | 5853 | 19’ 2-7/16” | 2259 | 7’ 4-31/32” | 13 | 1/2 | 10 | 3/8 |
| 10 | 2990 | 9’ 9-3/4” | 2787 | 9’ 1-23/32” | 2259 | 7’ 4-31/32” | 10 | 3/8 | 10 | 3/8 |

Width Overall (W): 8 ft. 0 in. (2435 mm)
Height Overall (H): 8 ft. 0 in. (2435 mm), 8 ft. 6 ¾ in. (2600 mm), or 9 ft. 6 in. (2896 mm)
Note: Dimensions S and P are reference dimensions only. The tolerances to be applied to S and P are governed by the tolerances shown for the overall length (L) and overall width (W).

**FIGURE 26. Container dimensions.**

**TABLE 35. Dry cargo ISO containers .**

| Container ISO Designation | Nominal Dimensions W by H by L (ft, m) | Actual Exterior Dimensions W by H by L (ft, m) | Approx Interior Dimensions W by H by L (in., mm) | Door Opening W by H (in., mm) | Gross Weight Ratings (lb, kg) |
|---|---|---|---|---|---|
| 1C | 8 by 8 by 20<br>2.44 by 2.44 by 6.10 | 8 by 8.00 by 19.88<br>2.44 by 2.44 by 6.06 | 90.5 by 86.5 by 231<br>2299 by 2197 by 5867 | 90 by 84<br>2286 by 2134 | 52,900<br>23 995 |
| 1CC | 8 by 8.5 by 20<br>2.44 by 2.59 by 6.10 | 8 by 8.54 by 19.88<br>2.44 by 2.60 by 6.06 | 90.5 by 92.5 by 231<br>2299 by 2350 by 5867 | 90 by 89<br>2286 by 2261 | 52,900<br>23 995 |
| 1A | 8 by 8 by 40<br>2.44 by 2.44 by 12.19 | 8 by 8.00 by 40.00<br>2.44 by 2.44 by 12.19 | 90.5 by 86.5 by 472.38<br>2299 by 2197 by 11 998 | 90 by 84<br>2286 by 2134 | 67,200<br>30 482 |
| 1AA | 8 by 8.5 by 40<br>2.44 by 2.59 by 12.19 | 8 by 8.54 by 40.00<br>2.44 by 2.60 by 12.19 | 90.5 by 92.5 by 472.38<br>2299 by 2350 by 11 998 | 90 by 89<br>2286 by 2261 | 67,200<br>30 482 |
| 1AAA [1] | 8 by 9.5 by 40<br>2.44 by 2.90 by 12.19 | 8 by 9.51 by 40.00<br>2.44 by 2.90 by 12.19 | 90.5 by 104.67 by 472.50<br>2299 by 2659 by 11 989 | 90 by 102<br>2286 by 2591 | 67,200<br>30 482 |

[1] This ISO container could be difficult to transport efficiently worldwide due to bridge and tunnel clearances.

**5.8.2 Designing for containerization.** When designing items of equipment for transport via ISO containers, the designer should allow for adequate clearance for the equipment to fit inside the container and be tied down. The design criteria in table 36 (page 81) allows for clearances to prevent SEM from contacting the door and/or walls of the container during loading. In addition, the item of equipment shall not exceed the container floor load limitations described in 5.8.1 (page 78). Additional weight limitations may be imposed on item design, depending on the mode of transport involved. Container gross operating weights shall not exceed the weight limitations in table 37 (page 81) when a fixed-wing aircraft transport requirement exists.

**TABLE 36. Design limits for equipment requiring transport in containers .**

| External Container Dimensions (ft, m) | Maximum Item Dimensions | | | Gross Weight (lb, kg) |
|---|---|---|---|---|
| | Width (in., mm) | Height (in., mm) | Length (in., mm) | |
| 8 by 8 by 20<br>2.44 by 2.44 by 6.10 | 85<br>2159 | 80<br>2032 | 219<br>5563 | 52,900<br>23 995 |
| 8 by 8.5 by 20<br>2.44 by 2.59 by 6.10 | 85<br>2159 | 85<br>2159 | 219<br>5563 | 52,900<br>23 995 |
| 8 by 8 by 40<br>2.44 by 2.44 by 12.19 | 85<br>2159 | 80<br>2032 | 460<br>11 684 | 67,200<br>30 482 |
| 8 by 8.5 by 40<br>2.44 by 2.59 by 12.19 | 85<br>2159 | 85<br>2159 | 460<br>11 684 | 67,200<br>30 482 |
| 8 by 9.5 by 40<br>2.44 by 2.90 by 12.19 | 85<br>2159 | 100<br>2540 | 460<br>11 684 | 67,200<br>30 482 |

**TABLE 37. Maximum gross weight of container (fixed-wing) .**

| Freight Container Designation | Maximum Gross Weight (lb, kg) |
|---|---|
| 1A | 45,000<br>20 412 |
| 1C | 25,000<br>11 340 |

**5.8.3 Rocket and missile containers.** Containers shall protect rockets or missiles in all environments encountered during transportation, handling, and storage. See 4.8 (page 12) for more information about transporting hazardous materials.

**5.8.4 Flatracks.** This section addresses the ISO flatracks, FSS (35-foot (10.67 m)) flatracks, and the conventional containership (40-foot (12.91 m)) heavy-duty units. There are other flatracks available in varying sizes, configurations, and methods of employment. Flatracks are portable, open-top, open-side, 'tween-deck (see 3.45 on page 9) cargo-carrying platforms that fit into the standard cells of container-carrying ships (see figure 27 (page 84)) and figure 28 (page 87)). The heavy duty flatracks have approximately twice the cargo capacity of commercial flatracks. The FSS and heavy-duty flatracks provide the capability to stow vehicles, oversized equipment and breakbulk cargo that cannot be placed into containers. Heavy-duty and FSS flatracks are provided with wood flooring and recessed 70,000-pound (31 752 kg) capacity D-rings for securing cargo.

**5.8.4.1 ISO Flatracks.** ISO flatracks are intended for transport of long or awkward to handle items such as drums, coils, pipes and long crates. ISO flatracks may have either open or paneled end walls. Ammunition shipments require that the end wall be paneled. ISO flatracks are available with both folding and fixed end frames. The external dimensions and capacities are the same as shown for containers in table 36 (page 81).

**5.8.4.2 FSS Flatracks.** The FSS flatracks have a maximum gross weight of 55,000 pounds (24,948 kg). The FSS (35-foot (10.67 m)) flatracks were produced in three types to maximize the cargo capacity of the ships. Flatrack weight and dimensional limitations are provided in table 38 (page 83). When designing an item/system for transport in FSS flatracks, the item/system weight and dimensions shall not exceed the limitations given in table 38 (page 83).

**5.8.4.3 Heavy duty flatracks.** The general characteristics of the 40-foot (12.19 m) heavy-duty flatrack are as shown below. When designing an item/system for transport in the 40-foot (12.19 m) heavy-duty flatracks, the item/system weight and dimensions shall not exceed the maximum internal limitations cited in this paragraph.

| | | |
|---|---|---|
| External Dimensions: | Length | 40 feet 0 inch (12.19 m) |
| | Width | 8 feet 0 inch (2.44 m) |
| | Height | 13 feet 0 inch (3.96 m) * |

*Some heavy duty flatracks have adjustable endposts allowing a cargo height range from 8 feet 6 inches to 13 feet 0 inch.

| | | |
|---|---|---|
| Internal Dimensions: | Length | 38 feet 6 inches (11.73 m) |
| (cargo maximums) | Width | 8 feet 0 inch (2.44 m) |
| | Height | 10 feet 6 inches (3.20 m) |

| | |
|---|---|
| Flatrack weight (nominal): | 18,000 pounds (8165 kg) |
| Maximum cargo weight: | 144,000 pounds (65 318 kg) |

Maximum point load: 190 psi (133 583 kg/m$^2$)
Maximum uniform load: 525 psf (2563 kg/m$^2$)

NOTE: The maximum gross lifting weight of a heavy-duty flatrack, using a 40-foot (12.19 m) spreader is 67,200 (30 482 kg) pounds.

**TABLE 38. FSS flatrack, dimensions, weight and capacities .**

| | Type I | Type II | Type III |
|---|---|---|---|
| Quantity Aboard | 53 | 22 | 3 |
| Dimensions (External)<br>Length (ft, m)<br>Width (ft, m)<br>Height (ft, m) | <br>35.00, 10.67<br>8.00, 2.44<br>15.25, 4.65 | <br>35.00, 10.67<br>8.00, 2.44<br>12.00, 3.66 | <br>35.00, 10.67<br>8.00, 2.44<br>10.25, 3.12 |
| Dimensions (Internal), or Maximum Cargo Size<br>Length (ft, m)<br>Width (ft, m)<br>Height (Clear) (ft, m) | <br><br>33.75, 10.29<br>8.00, 2.44<br>13.50, 4.11 | <br><br>33.75, 10.29<br>8.00, 2.44<br>10.25, 3.12 | <br><br>33.75, 10.29<br>8.00, 2.44<br>8.50, 2.59 |
| Weight of Flatrack (lb, kg) | 19,300, 8754 | 17,841, 8093 | 17,511, 7943 |
| Area per Flatrack (sq ft, m$^2$) | 270, 25.08 | 270, 25.08 | 270, 25.08 |
| Volume per Flatrack<br>(cu ft, m$^3$) | 3,645<br>103.22 | 2,768<br>78.38 | 2,295<br>64.99 |
| Weight Capacities<br>Lifting[1] (lb, kg)<br><br>Maximum[2] (lb, kg) | <br>35,700<br>16 193<br><br>134,000<br>60 782 | <br>37,159<br>16 855<br><br>134,000<br>60 782 | <br>37,489<br>17 005<br><br>134,000<br>60 782 |

[1] The maximum weight that can be placed on a flatrack that is to be lifted with a 35-ft (10.67 m) container lifting spreader.
[2] The actual weight that can be placed on a flatrack that has been positioned in a cargo hold.

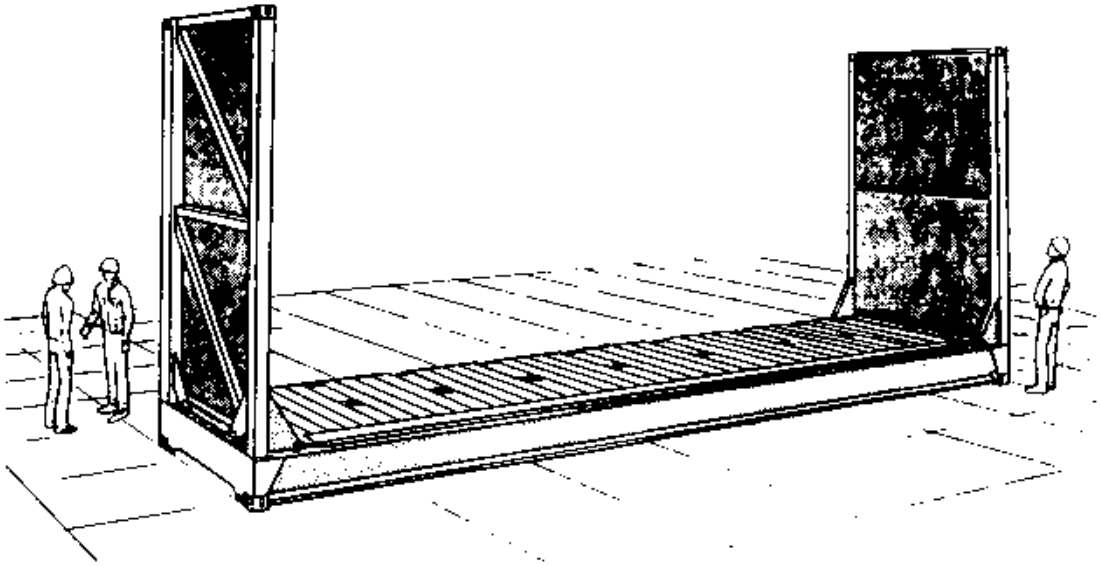

35-foot open-top, open sided flatrack

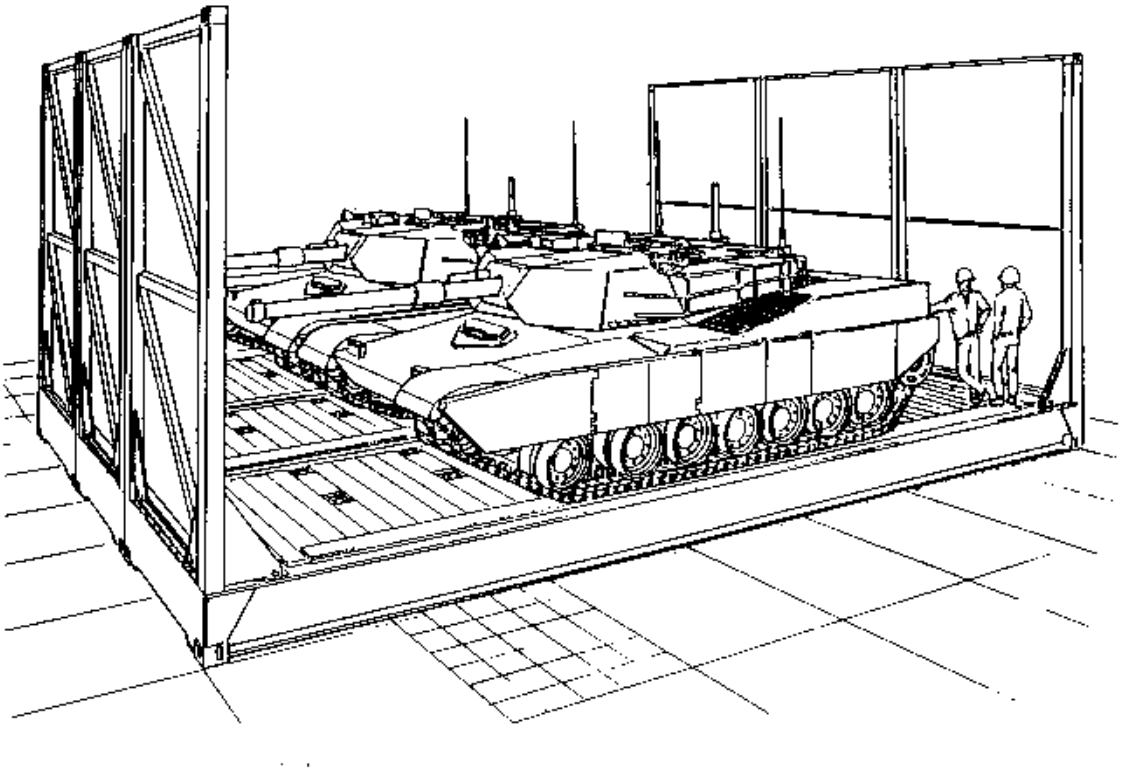

Flatracks used as a temporary 'tween deck

**FIGURE 27. FSS flatrack.**

**5.8.5 Load Handling System (LHS) flatracks.** The palletized load system (PLS) has an integral load handling system (LHS) capable of loading and unloading flatracks onto the PLS truck and trailer. Currently, there are three flatracks that are compatible with the PLS; the M1077, M1, and M3 (Container Roll-in/Out Platform (CROP)) flatracks (see figure 28 on page 87). The PLS flatracks comply with the requirements of the Interoperable Flatrack Main Dimensions drawing of NATO Standardization Agreement (STANAG) 2413 and can be loaded, transported and unloaded using the LHSs of the partner nations vehicles. The partner nations are the United States, France, Germany and the United Kingdom.

**5.8.5.1 Palletized Load System (PLS) M1077 flatrack.** The M1077 flatrack is typically referred to as the A-frame flatrack. The M1077 is equipped with ISO corner fittings and can transport a 20 foot (6.10 m) ISO container.

| | | |
|---|---|---|
| External Dimensions: | Length | 240 inches, 6096 mm |
| | Width | 96 inches, 2438 mm |
| | Height | 68.4 inches, 1737 mm |
| Internal Dimensions: | Length | 230.4 inches, 5852 mm |
| (cargo maximums, other than | Width | 90.5 inches, 2299 mm |
| ISO container) | Height | 72.3 inches, 1836 mm |
| Tare weight: | 3,190 pounds, 1447 kg | |
| Gross weight: | 36,250 pounds, 16 443 kg | |

**5.8.5.2 PLS M1 flatracks.** The M1 flatrack is transportable throughout the intermodal system as a flatrack or on the PLS truck without the use of additional equipment.

| | | |
|---|---|---|
| External Dimensions: | Length | 240 inches, 6096 mm |
| | Width | 96 inches, 2438 mm |
| | Height | 82 inches, 2083 mm |
| Internal Dimensions: | Length | 228 inches, 5791 mm |
| (cargo maximums) | Width | 96 inches, 2438 mm |
| | Height | 70 inches, 2083 mm |
| Tare weight: | 7,300 pounds, 3311 kg | |
| Gross weight: | 36,250 pounds, 16 443 kg | |

**5.8.5.3 PLS M3 flatracks (CROP).** The M3 or CROP is a cargo carrying platform capable of being transported on the PLS truck and trailer and inside any ISO 1CC dry cargo container.

| | | |
|---|---|---|
| External Dimensions: | Length | 230 inches, 5842 mm |
| | Width | 91.5 inches, 2324 mm |
| | Height | 10.5 inches, 267 mm (to top of deck) |
| | | 64 inches, 1626 mm (to top of A-frame) |
| Internal Dimensions: | Length | 217 inches, 5519 mm |
| (cargo maximums) | Width | 89 inches, 2261 mm |
| | Height | 74 inches, 1880 mm |
| Tare weight maximum: | 4,000 pounds, 1814 kg | |
| Gross weight: | 36,250 pounds, 16 443 kg | |

**5.9 Shelters.**

**5.9.1 General.** A rigid wall shelter is a transportable facility designed and constructed to house equipment, such as electronics and communication systems, shop sets, medical equipment, and so forth. These shelters see widespread use and are exposed to multiple forms of transportation which results in shelters being the primary interface for a system's mobility. The DoD Joint Committee on Tactical Shelters (JOCOTAS) has recognized a limited number of shelters as standard and acceptable for DoD use. These shelters are identified in the Defense Acquisition Deskbook under "JOCOTAS". General design, construction and test criteria for DoD shelters are described in ASTM E 1925, Engineering and Design Criteria for Rigid Wall Relocatable Structures. Specific performance, interface and fabrication details are found in military specifications for each shelter type.

**5.9.1.1 S-250 Shelter.** Weight and dimensional characteristics of the S-250 shelter are given in figure 29 (page 88).

**5.9.1.2 Lightweight Multipurpose Shelter (LMS), S-788.** The LMS is a nondevelopmental item based on the shelter design for the S-787 SICPS Rigid Wall Shelter (RWS). It is an empty "box" made of aluminum skin and paper honeycomb core sandwich panel construction which gives it a high strength to weight ratio. The three types of LMS are described in figure 30 (page 89). The host vehicles for the LMS are the M1037 High Mobility Multipurpose Wheeled Vehicle (HMMWV), the M1097 HMMWV Heavy Variant (HHV), the M1031 Commercial Utility Cargo Vehicle (CUCV), and the XM1113 Expanded Capacity Vehicle (ECV) HMMWV.

**5.9.1.3 S-280 Shelter.** Weight and dimensional characteristics of the S-280 shelter are given in figure 31 (page 90).

**5.9.1.4 ISO shelter.** Weight and dimensional characteristics for the ISO shelter are given in figure 32 (page 91).

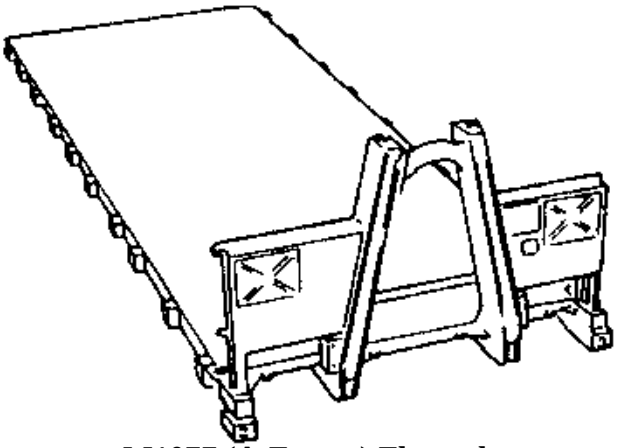

**M1077 (A-Frame) Flatrack**

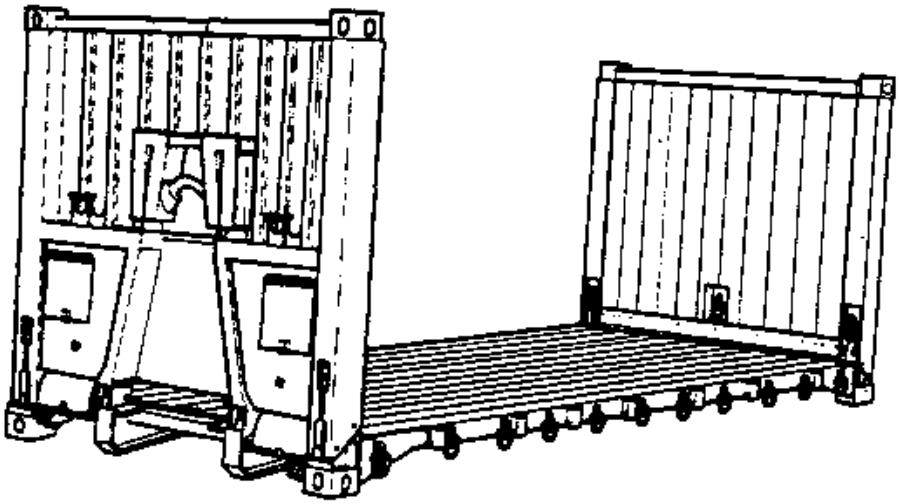

**M1 (Intermodal) Flatrack**

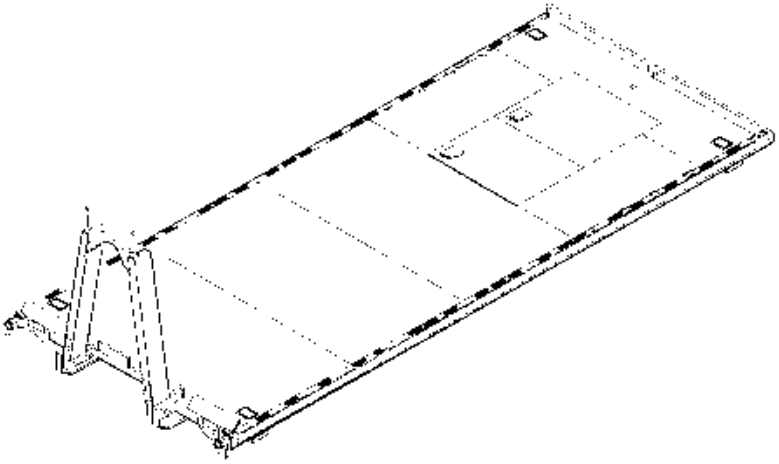

**M3 (CROP) Flatrack**

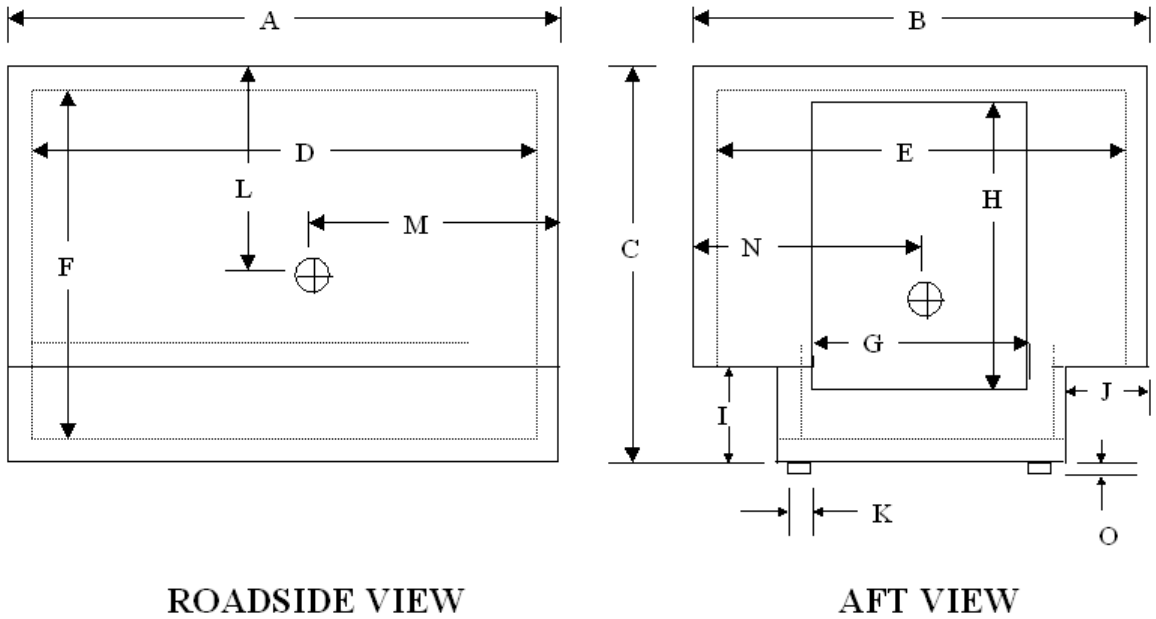


EMPTY WEIGHT: 770 lb, 349 kg
GROSS WEIGHT: 3,330 lb, 1211 kg
LIFTING AND TIEDOWN PROVISION CAPACITY: 5,000 lb, 2268 kg

**SHELTER DIMENSIONAL DATA (dimensions in inches and mm)**

| Nomenclature | A | B | C | D | E | F | G | H | I | J | K | L | M | N | O |
|---|---|---|---|---|---|---|---|---|---|---|---|---|---|---|---|
| S-250/G | 85 5/8<br>2175 | 79 1/16<br>2008 | 70<br>1778 | 78 1/16<br>1983 | 75 3/32<br>1907 | 64 3/32<br>1628 | 30<br>762 | 55<br>1397 | 19 9/32<br>490 | 15 7/32<br>387 | 3 1/2<br>89 | 37<br>940 | 36<br>914 | 39<br>991 | 2 3/32<br>53 |

**FIGURE 29. S-250 shelter (MIL-S-55541).**

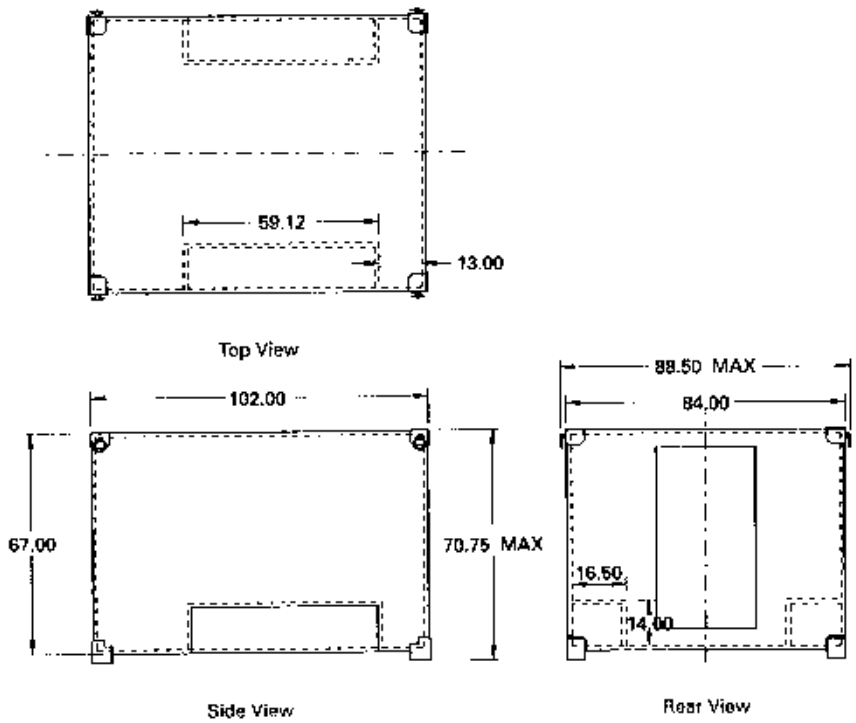


| Type | NSN | Tare Weight without mounting kit (lb) | Tare Weight with mounting kit (lb) | Payload (lb) | Description |
|---|---|---|---|---|---|
| I | 5411-01-357-3582 | 560 | 630 | 3,300 | The basic shelter consists of: the shelter structure with personnel door, a door access ladder for when the shelter is mounted on a host vehicle, a drain plug in the floor of the shelter, front and rear vehicle mounts with hardware, inserts for attachment of a bootwall, roof-edge doubler plate, and fold out steps on the side wall. |
| II | 5411-01-333-5941 | 630 | 700 | 3,300 | Shelter, modified. This shelter includes everything contained in the type I basic shelter and in addition, a 29-inch wide by 33-inch high tunnel across the bottom front of the shelter with a drain in the floor and openings on each side, a secondary door in the roof, and a chemical and biological (CB) purge valve located in the bottom center of the rear personnel door. |
| III | 5411-01-357-3583 | 610 | 680 | 3,300 | Shelter modified. This shelter includes everything contained in the type I basic shelter and in addition, a 29-inch wide by 33-inch high tunnel across the bottom front of the shelter with openings on each side. |

**FIGURE 30. Lightweight Multipurpose Shelter, S-788.**

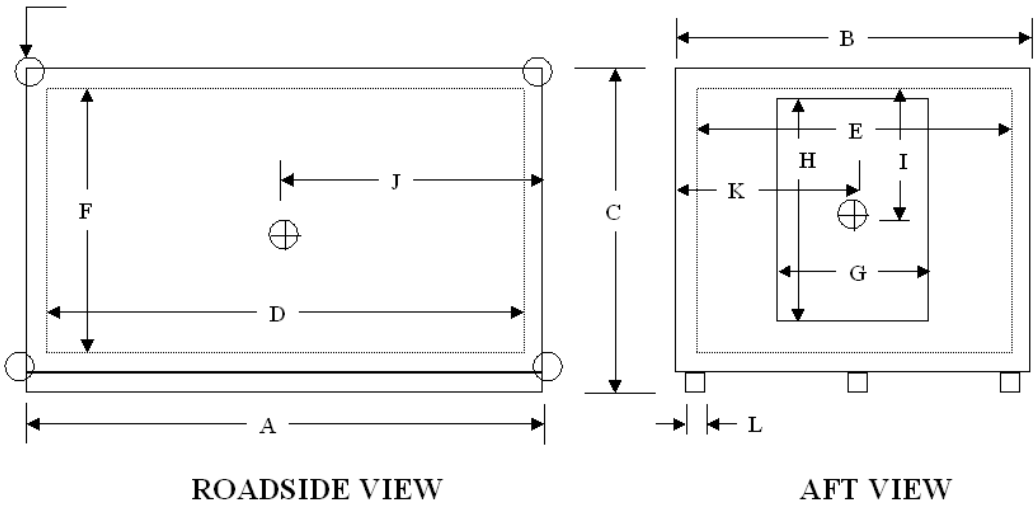


| S-280 SHELTER (MIL-S-55286) | | | | | | | | | | | | |
|---|---|---|---|---|---|---|---|---|---|---|---|---|
| SHELTER DIMENSIONAL AND WEIGHT DATA (Dimensions in inches and mm) | | | | | | | | | | | | |
| NOMENCLATURE | A | B | C | D | E | F | G | H | I | J | K | L |
| S-280/G,A/G<br>S-280B/G | 147<br>3734 | 87<br>2210 | 83 3/8<br>2118 | 138<br>3505 | 81 ¾<br>2076 | 74 ¾<br>1899 | 35<br>889 | 64 ¾<br>1645 | 47<br>1194 | 71<br>1803 | 44<br>1118 | 4<br>102 |
| S-280C/G | 147<br>3734 | 87<br>2210 | 86 3/8<br>2194 | 138<br>3505 | 81 ¾<br>2076 | 77 1/8<br>1959 | 35<br>889 | 64 ¾<br>1645 | 55<br>1397 | 68<br>1727 | 44<br>1118 | 4<br>102 |

| | S-280/G, A/G, B/G (lb, kg) | S-280 C/G (lb, kg) |
|---|---|---|
| EMPTY WEIGHT | 1,380, 626 | 1,400, 635 |
| GROSS WEIGHT | 6,380, 2894 | 8,500, 3856 |
| LIFTING AND TIEDOWN PROV. CAPACITY | 11,000<br>4990 | 14,400<br>6532 |

**FIGURE 31. S-280 shelter.**

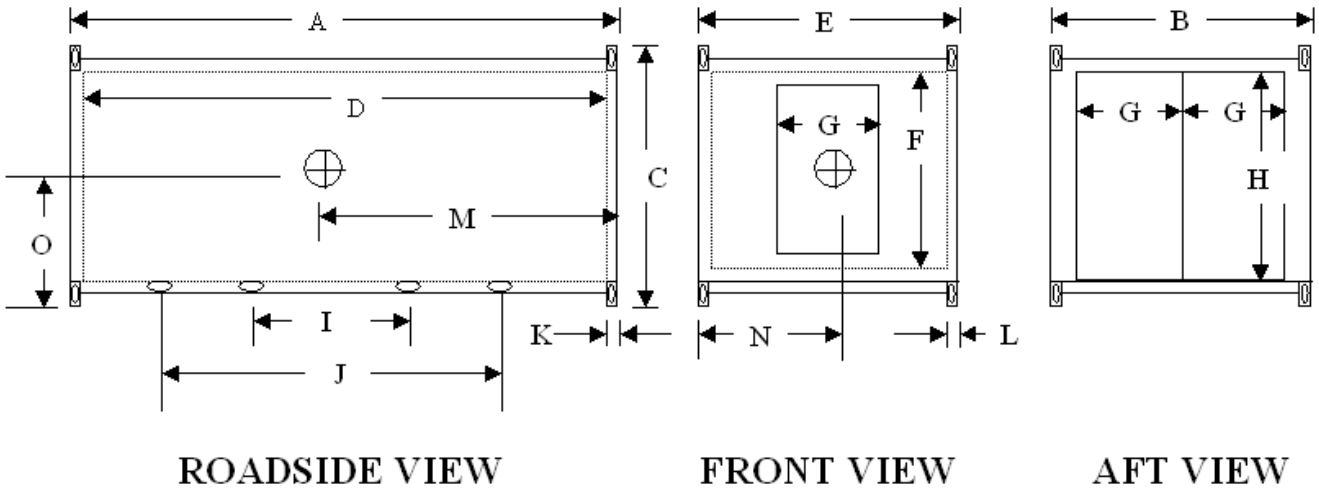


| ISO SHELTER SHIPPING MODE DIMENSIONS (inches and mm) | | | | | | | | | | | | | | | |
|---|---|---|---|---|---|---|---|---|---|---|---|---|---|---|---|
| NOMENCLATURE | A | B | C | D | E | F | G | H | I | J | K | L | M | N | O |
| NON EXPANDABLE | 238.5<br>6058 | 96<br>2438 | 96<br>2438 | 229.3<br>5824 | 90.8<br>2306 | 85.3<br>2167 | 36<br>914 | 80<br>2032 | 34<br>864 | 82.5<br>2096 | 7<br>178 | 6.3<br>160 | 120<br>3048 | 49<br>1245 | 42<br>1067 |
| 1 SIDE EXP | 238.5<br>6058 | 96<br>2438 | 96<br>2438 | 229.3<br>5824 | 84<br>2134 | 85.3<br>2167 | 36<br>914 | 80<br>2032 | 34<br>864 | 82.5<br>2096 | 7<br>178 | 6.3<br>160 | 121<br>3073 | 59<br>1499 | 46<br>1168 |
| 2 SIDE EXP | 238.5<br>6058 | 96<br>2438 | 96<br>2438 | 229.3<br>5824 | 77.8<br>1976 | 85.3<br>2167 | 36<br>914 | 88<br>2032 | 34<br>864 | 82.5<br>2096 | 7<br>178 | 6.3<br>160 | 122<br>3099 | 49<br>1245 | 48<br>1219 |

| Shipping Mode | Non-Expandable (lb, kg) | One Side-Expandable (lb, kg) | Two Side-Expandable (lb, kg) |
|---|---|---|---|
| EMPTY WEIGHT | 3,860, 1751 | 5,520, 2504 | 6,950, 3153 |
| PAYLOAD | 11,140, 5053 | 9,480, 4300 | 8,050, 3651 |
| TOTAL | 15,000, 6804 | 15,000, 6804 | 15,000, 6804 |

**FIGURE 32. ISO Shelter.**

**5.9.2 Shelter Transportability.** Standard DOD shelters are designed and tested to be safely transported at their maximum rated payload. DOD systems housed in shelters and designed for movement by any mode of transport must stay within the payload limitations imposed by the shelter, prime-mover, and transport equipment. Staying within these payload capabilities promotes safe transport, reduces potential damage to mission equipment, prime-mover, shelter, and transport equipment, and reduces prime-mover and transporter maintenance requirements. When determining the system payload and/or gross weight of the prime mover, the system developer must consider all associated items of equipment that are transported with the item or system, as well as crew members, their equipment, and trailer tongue weights. Consistent with the definition of gross weight and vehicle payload, associated items of equipment may include such items as camouflage, concertina wire, tents, extra fuel, water, and tools and spare parts.

**5.9.3 Shelter Modifications.** In many cases, a system developer is required to modify a standard shelter during system integration. These modifications typically include wall cutouts for environmental control equipment, electronics interface, and the installation of racks. These systems may be required to conduct shelter transportability certification testing depending upon the extent to which the shelter is modified and the transport modes required for the system's movement. The system's transportability report should highlight any shelter modifications so that the transportability analysis can recommend when additional testing is required. Particular consideration should be given to the use of the Army Standard Family of ISO Shelters and other DOD ISO shelters. Modifications to these types of shelters may require ISO recertification before they will be shipped by commercial modes. Modifications to ISO shelters may affect structural characteristics and their ability to meet loads imposed by shipping (i.e. stacking 6 or 9 high in container ships). Shelter modification drawings must be reviewed by a Coast Guard approved inspection agency (check Convention for Safe Containers (CSC) certification plate for agency) for a determination of recertification. Retesting may be required in some cases.

**5.9.4 Nonstandard shelters.** Any use of a shelter not included in the DOD inventory of standard shelters must be approved by the Joint Committee on Tactical Shelters (JOCOTAS). Transportability approval will not be granted unless this approval is obtained. System Developers should contact their JOCOTAS service representatives for guidance in the use of nonstandard shelters. Service representatives can be found by contacting the U.S. Army Natick Research, Development and Engineering Center, ATTN: SSCNC-WSA, Natick, MA 01760-5018, DSN 256-5338 or (508) 233-5338.

**5.10 Overloads.**

**5.10.1 General.** Items of equipment developed for movement by any mode of transport should meet the payload limitations imposed by the transport equipment. Staying within the payload capabilities of the transport equipment promotes safe transport, reduces potential damage to transport equipment, and reduces transporter maintenance requirements. When determining the payload and/or gross weight of the transport equipment, the designer must consider all associated items of equipment that are transported with the item or system. Consistent with the definition of gross weight and vehicle payload, associated items of equipment may include such items as camouflage, concertina, tents, extra fuel, water, and tools and spare parts.

**5.10.2 Overload prevention.** Procedures for preventing overloads are found in MIL-STD-910. It describes shelters, trailers, vehicles and their interaction in determining accurate system payloads and identifying areas where overload situations exist.

**5.10.3 Other prime mover overload considerations.** For SEM requiring highway transport, the following prime mover characteristics shall not be exceeded. They are: towed load allowance for a cargo truck or truck tractor pintle, towed load allowance for a truck tractor fifth wheel receptacle, vertical pintle load allowance, fifth wheel receptacle vertical load allowance, and prime mover vehicle weight rating.

**5.10.4 Designing for transport.** Unless otherwise specified, new items of equipment shall be designed such that their weight does not exceed the payload capabilities of the required transport equipment. When an item of equipment/system is designed for transport by specific transport equipment, the item/system shall meet requirements to prevent overloads.

**5.11 Assembly/disassembly.**

**5.11.1 General.** The objective of transportability design is to ensure developed items of equipment are capable of rapid and efficient deployment by all required transport modes. Large and heavy items of equipment may not meet weight and dimensional transport limitations, thereby requiring alternate routing, special procedures, and/or disassembly for transport. This can cause unnecessary delays during item transport, costly delays for receiving units, and use of valuable time to reassemble the item. When practical, an item of equipment should be designed such that transport can be achieved without major disassembly of the item.

**5.11.2 Transportability design for assembly/disassembly.** Unless otherwise required by the combat developer (CBTDEV), items to be used in the initial support of forces deployed in a contingency operation, including supply by air, shall be operational immediately, except for selected engineer construction equipment, which must be capable of employment within 1 hour.

## 6. NOTES

This section contains information of a general or explanatory nature that may be helpful, but is not mandatory.

**6.1 Intended use.** This standard is intended for use as an element of the overall engineering for transportability program as both design and evaluation criteria for the development of DOD systems and equipment.

**6.2 Issue of DODISS.** When this standard is used in acquisition, the issue of the DODISS applicable to the solicitation should be cited (see 2.1.1 (page 1) and 2.1.2 (page 2)).

**6.3 Data Requirements.** Data Item Description (DID) DI-PACK-80880A, Transportability Report, should be listed on the Contract Data Requirements List (DD Form 1423) when this standard is applied on a contract to obtain the data, except where DOD Federal Acquisition Regulation (FAR) Supplement 27.475-1 exempts the requirement for a DD Form 1423.

**6.4 Tailoring guidance for contractual application.** The PM is responsible for tailoring the contract work statements to ensure the timely development of transportability for the system or equipment and submittal of needed data. The work statements must be geared to the complexity of the system or equipment procured and the life cycle phase. These work statements may be invoked by citing this standard and the pertinent paragraphs. To ensure proper application of this standard, invitations for bids, requests for proposals, and contractual statements of work should tailor the requirements of sections 4 and 5 of this standard to exclude unnecessary requirements. Personnel with expertise in transportability should be involved in the tailoring process.

**6.5 Subject term (key word) listing.**

Approval, transportability
Criteria
Engineering, transportability
Lifting
Military standards
Provision, lifting
Provision, tiedown
Report, transportability
Tiedowns
Transport, air
Transport, highway
Transport, rail
Transport, water
Transportability
Transportability engineering analysis
Transportability problem item

**6.6 International standardization agreements.** Certain provisions of this standard are the subject of international standardization agreements (STANAG 2021, STANAG 2173, STANAG 2175, STANAG 2832, STANAG 3400, STANAG 3542, STANAG 3548, STANAG 3854, STANAG 4062, QSTAG 328, AIR STD 44/9, AIR STD 44/12 and AIR STD 44/21). When a change notice, revision, or cancellation of this standard is proposed that will modify the international agreements concerned, the preparing activity for this standard will take appropriate action through international standardization channels, including departmental standardization offices, to change the STANAG(s) or make other appropriate accommodations.

# APPENDIX A

# SAMPLE PROBLEM FOR DETERMINING BRIDGE FORMULA REQUIREMENTS

## A.1. GENERAL

**A.1.1 Scope.** This appendix establishes a sample application of the bridge formula.

## A.2. APPLICABLE DOCUMENTS

This section is not applicable to this appendix.

## A.3. NOTATION

**A.3.1 Symbols.** As stated in paragraph 5.1.2.2 (page 13), the following letter symbols apply.

W = overall gross weight on any group of two or more consecutive axles to the nearest 500 pounds.

L = distance in feet between the extreme of any group of two or more consecutive axles.

N = number of axles in the group under consideration.

## A.4. GENERAL REQUIREMENTS

None.

## A.5. DETAILED REQUIREMENTS

**A.5.1 Example.** See figure 33 (page 97). For a vehicle with weights and axle dimensions as shown in this figure, bridge formula requirements are determined as follows.

**A.5.1.1 Determine axle combinations to be analyzed.** The contractor and/or MATDEV must determine bridge formula requirements for all axle combinations. For the example in figure 33 (page 97), the possible axle combinations are:

| | |
|---|---|
| 1 through 2 | 2 through 4 |
| 1 through 3 | 2 through 5 |
| 1 through 4 | 3 through 4 |
| 1 through 5 | 3 through 5 |
| 2 through 3 | 4 through 5 |

Bridge formula requirements must be met for all of these combinations.

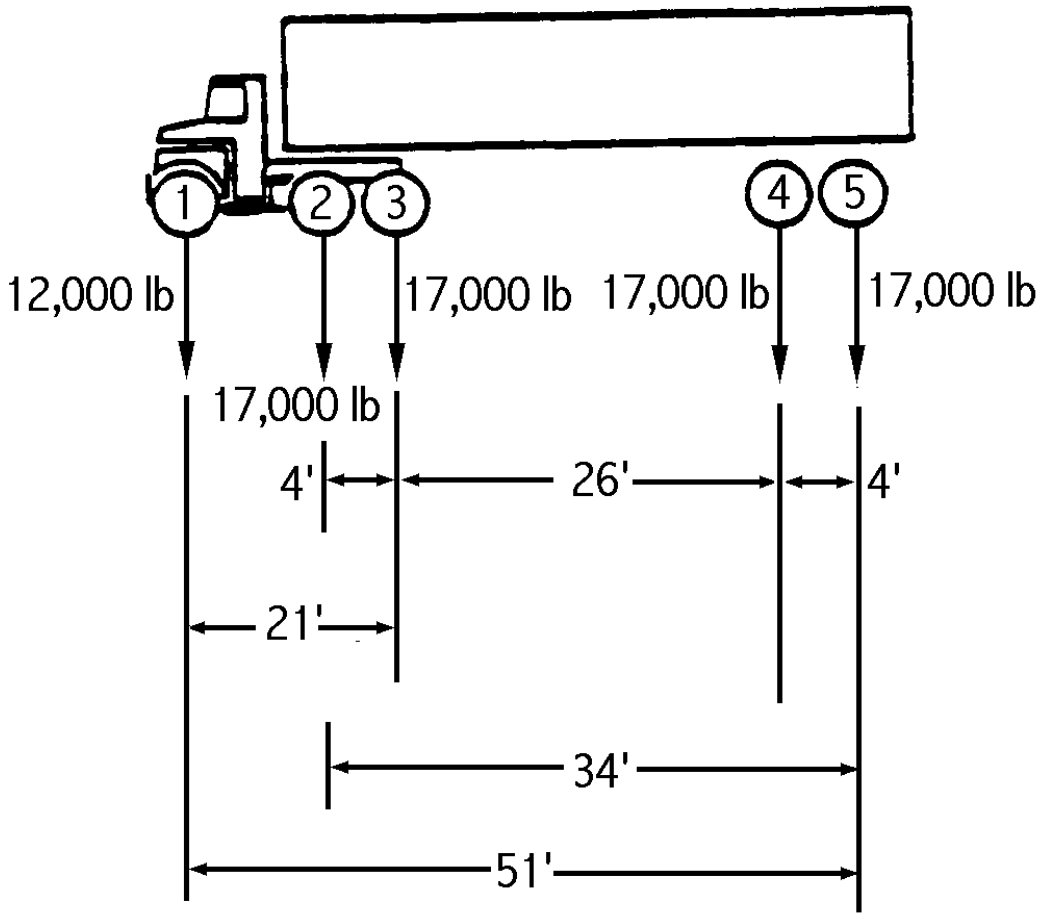


**FIGURE 33. Sample case for determining bridge formula requirements.**

**A.5.1.2 Using bridge formula, determine maximum allowable loading for each axle combination.**

**a.** For the single axle (axle 1), tandem axles (axles 2-3 and 4-5), and vehicle gross weight (axles 1-5); the actual axle loads must not exceed 20,000 pounds, 34,000 pounds, and 80,000 pounds respectively. Please note that the bridge gross weight formula defines a tandem axle as two or more consecutive axles whose centers may be included between parallel vertical planes spaced more than 40 inches and not more than 96 inches apart, extending across the full width of the vehicle. In figure 33 (page 97), axle groupings 2 through 3 and 4 through 5 are each spaced 4-feet apart. Therefore, these two axle groupings are both tandem axles. As shown in the figure, the actual axle loads for the single axle, tandem axles, and gross weight are 12,000 pounds, 34,000 pounds (for both 2-3 and 4-5), and 80,000 pounds respectively. Hence, the bridge formula is not exceeded for these combinations.

**b.** For the other axle combinations, the following calculation shows an example of a bridge formula calculation. This calculation is for the axle combination 1 through 3.

$W = 500\ (LN/(N-1) + 12N + 36)$

$W = 500\ [(21 \times 3)/(3 - 1) + (12 \times 3) + 36]$

W = 51,500 pounds (rounded to nearest 500 pounds)

This is the maximum allowable load for axles 1 through 3 under the bridge formula. All other axle combinations would be computed similarly to this.

**c.** Compare maximum allowable loading to actual loading:

For axle combinations 1 through 3:

W actual = 12,000 + 17,000 + 17,000 = 46,000 pounds

For this axle combination, W actual (46,000 pounds) < W maximum (51,500 pounds).

Hence, the bridge formula is met for axle combination 1 through 3.

**d.** Using the bridge formula, the maximum allowable loading for each of the possible axle combinations for this example are (see A.5.1.1 on page 96):

| | |
|---|---|
| 1 through 2 = 47,000 pounds | 2 through 4 =58,500 pounds |
| 1 through 3 = 51,500 pounds | 2 through 5 =64,500 pounds |
| 1 through 4 = 73,500 pounds | 3 through 4 =56,000 pounds |
| 1 through 5 = 80,000 pounds* | 3 through 5 =58,500 pounds |
| | 4 through 5 =34,000 pounds** |

* Maximum allowable gross weight.
** Maximum allowable for tandem axle.

**e.** There is one exception to the bridge formula. Two consecutive sets of tandem axles may carry a gross load of 34,000 pounds each providing the overall distance between the first and last axles of such consecutive sets of tandem axles is 36 feet or more. In figure 33 (page 97), the distance between the first axle of grouping 2 through 3 and the last axle of 4 through 5 is 34 feet. Hence, this example does not meet the exception.

**f.** Please note that for this example: For axle combination 2 through 5 W actual (68,000 pounds) > W maximum (64,500 pounds). Therefore, the example in figure 33 (page 97) does not meet the bridge formula because the loading for axle combination 2 through 5 exceeds the bridge formula allowable.

Custodian:
Army - MT
Navy - SA
Air Force - 11

Review activities:
Army - CR3, ET, GL3, PT, SM, TM2
Navy - AS, CG, ED, NP, TD
Air Force - 13, 69
DLA - CC, DH, GS
Civ - FCOE
OSD - SE, SP

Preparing Activity:
Army - MT

Project No. PACK-1080

# STANDARDIZATION DOCUMENT IMPROVEMENT PROPOSAL

**INSTRUCTIONS**

1. The preparing activity must complete blocks 1, 2, 3, and 8. In block 1, both the document number and revision letter should be given.
2. The submitter of this form must complete blocks 4, 5, 6, and 7.
3. The preparing activity must provide a reply within 30 days from receipt of the form.

NOTE: This form may not be used to request copies of documents, nor to request waivers, or clarification of requirements on current contracts. Comments submitted on this form do not constitute or imply authorization to waive any portion of the referenced document(s) or to amend contractual requirements.

**I RECOMMEND A CHANGE:**

1. DOCUMENT NUMBER: MIL-STD-1366D
2. DOCUMENT DATE (YYMMDD): 98/12/18
3. DOCUMENT TITLE: INTERFACE STANDARD FOR TRANSPORTABILITY CRITERIA
4. NATURE OF CHANGE (Identify paragraph number and include proposed rewrite, if possible. Attach extra sheets as needed.)

5. REASON FOR RECOMMENDATION

6. SUBMITTER

a. NAME (Last, First, Middle Initial)

b. ORGANIZATION

c. ADDRESS (Include Zip Code)

d. TELEPHONE (Include Area Code)
(1) Commercial
(2) AUTOVON (If applicable)

7. DATE SUBMITTED (YYMMDD)

8. PREPARING ACTIVITY

a. NAME
Jennifer Napiecek

b. TELEPHONE (Include Area Code)
(1) Commercial (757) 599-1647
(2) AUTOVON DSN 927-4646

c. ADDRESS (Include Zip Code)
MTMCTEA, ATTN: MTTE-DPE
720 Thimble Shoals Blvd., Suite 130
Newport News, VA 23606-4537

IF YOU DO NOT RECEIVE A REPLY WITHIN 45 DAYS, CONTACT:
Defense Quality and Standardization Office
5203 Leesburg Pike, Suite 1403, Falls Church, VA 22041-3466
Telephone (703) 756-2340 AUTOVON 289-2340