MILITARY SPECIFICATION

MANUAL, TECHNICAL: TRANSPORTABILITY GUIDANCE FOR MILITARY MATERIEL, PREPARATION OF

This limited coordination Military specification has been prepared by the Military Traffic Management Command for use by the Department of the Army.

---

1. SCOPE

This specification prescribes the minimum requirements for the preparation of technical manuals that provide transportability guidance for the movement of military materiel. These instructions establish the format for the technical manual. They are not to be construed as requirements applicable to the design or construction of the materiel.

2. APPLICABLE DOCUMENTS

2.1 Government documents. The following documents, of the issue in effect on the date of the invitation for bids, form a part of this specification to the extent specified herein:

2.1.1 Military Specifications.

MIL-M-38784	Manuals, Technical: General Style and Format Requirements

2.1.2 Military Standards.

MIL-STD-12	Abbreviations for Use on Drawings and in Technical Type Publications
MIL-STD-100	Engineering Drawing Practices
MIL-STD-209	Slinging Eyes and Attachments for Lifting and Tying Down Military Equipment

2.1.3 Other Publications.

Department of Defense

DOD 5200.20	Distribution Statements (Other Than Security) on Technical Documents
DOD 5220.22-M	Industrial Security Manual for Safeguarding Classified Information

Department of Transportation

Code of Federal Regulations, Title 46, Part 146 (water)

Code of Federal Regulations, Title 49, Parts 170-179 (motor and rail)

Department of the Army

Regulations

AR 310-3	Preparation, Coordination, and Approval of Department of the Army Publications
AR 310-25	Dictionary of United States Army Terms
AR 310-50	Authorized Abbreviations and Brevity Codes

Manuals

TM 38-250 (AFM 71-4)	Packaging and Handling of Dangerous Materials for Transportation by Military Aircraft

(Copies of documents required by contractors in connection with specific procurement functions should be obtained from the procuring activity or as directed by the contracting officer.)

2.2 Conflict with other documents. Where the requirements of MIL-M-38784 or any other applicable publication covering preparation of technical manuals conflict with the style and format requirements specified herein, the requirements of this specification shall apply.

3. REQUIREMENTS.

3.1 General requirements. Requirements for the preparation of transportability guidance technical manuals shall be generally as specified in Military Specification MIL-M-38784. Reference is made, by subject matter or paragraph heading, to the relevant portions of documents listed in paragraph 2 above. Where methods for preparing transportability guidance manuals are significantly different from or are not sufficiently detailed in the reference documents, the subject is fully covered in this specification.

3.1.1 Coordination requirements. Transportability guidance technical manuals developed by the proponent command, agency, or office, or by procured services in accordance with this specification, shall be coordinated with and approved by the Director, Military Traffic Management Command Transportation Engineering Agency, ATTN: MTT-TRP, PO Box 6276, Newport News, VA 23606, through the Contracting Officer's Representative (COR).

3.1.2 Title, contents, and arrangement. The manual shall contain all essential information required by personnel engaged in the various phases associated with the movement of the item by all modes, worldwide, under varying geographical, climatic, and transportation environments. The title shall be "Transportability Guidance...." followed by the nomenclature of the item or system, or as specified in the contract. The text shall, as a minimum, contain the information elements listed in paragraph 3.2 and described in paragraphs 3.2.1 through 3.2.11 herein, unless otherwise specified.

3.1.2.1 Classified information. Classified information shall not be included. Essential classified information shall be issued in a separate classified document in accordance with DOD 5220.22-M and MIL-M-38784.

3.1.2.2 Government-furnished material. Information provided by the Government for inclusion in the manual(s) prepared by a contractor shall be reviewed and altered as required to assure its conformance with the style and format requirements specified herein. No changes, other than editorial, shall be made without prior approval by the Government. All material furnished by the Government or prepared by the contractor shall remain the property of the Government.

3.1.2.3 Nomenclature. Descriptive nomenclature of items of equipment, once named in the manual, may then be shortened to avoid needless repetition, provided enough descriptive nomenclature is retained to insure clear identification. For example, Armored Reconnaissance Airborne Assault Vehicle, M551, may be expressed as M551. In preparing text, use reverse nomenclature; that is, place the number after the item.

3.1.2.4 Publication number. The requirements of MIL-M-38784 are applicable.

3.1.2.5 Abbreviations. Abbreviations shall be held to a minimum and used only when their meaning is unquestionably clear. They shall be limited to the standard forms listed in AR 310-50 for text, tables, and text-related material, and MIL-STD-12 for drawings, illustrations, charts, graphs, and other graphic presentations.

3.1.2.6 References. References shall be used to hold the duplication of material to an absolute minimum. References shall be limited to documents that are required by the user. When only a small portion of a document is applicable, that portion shall be included rather than referenced. References to other manuals shall state the publication number; references to other

sections of the manual in preparation shall state the applicable paragraph or subparagraph number. Refer also to AR 310-3, chapter 2.

3.1.2.7 Warnings, cautions, and notes. The requirements of AR 310-3 are applicable.

3.1.2.8 Style. The text shall be presented in a manner that is readily understandable to a person with a minimum amount of knowledge and training in the subject field. The text of each section of each chapter shall be factual, concise, and so clearly worded as to be readily understood by all personnel who are expected to use that part of the manual. Technical phraseology requiring special knowledge shall be avoided except where no other wording will convey the intended meaning. Each paragraph shall be limited to a single procedure or subject. Only information necessary for proper understanding or execution of instructions contained in the paragraph shall be included. Every effort shall be made to avoid confusing the reader with lengthy paragraphs or verbiage.

3.1.3 Manner of Presentation. The contents of the manual shall be presented in the following manner:

3.1.3.1 Multimode manuals. Multimode manuals shall be presented in the following manner:

Volume - Is limited to 1,000 printed pages or 500 sheets.

Part - Covers separate levels, or any situation where a breakdown between chapter and volume is justified.

Chapter - Groups manual into prime divisions.

Section - Divides chapter into specific areas of coverage.

Paragraph - Presents text within section.

No less than two of any subdivision shall be used; that is, chapters will contain two or more sections; sections, two or more paragraphs. Numbering or lettering of pages, chapters, sections, paragraphs, illustrations, tables, charts, and appendixes shall be as specified in MIL-M-38784.

3.1.3.2 Single-mode manuals. Single-mode manuals shall not have parts or chapters. Sections may be warranted to divide specific areas of coverage. Numbering of pages, sections, and paragraphs shall be as specified in MIL-M-38784.

3.1.4 Publication date. Refer to MIL-M-38784.

3.1.5 Selection and use of illustrations. Illustrations will be used to support text as necessary for identification, emphasis, clarification, and visual demonstration. As subject complexity increases, the need for supporting illustrations also increases. Illustrations shall not be prepared solely to appeal to reader interest, for decorative purposes, or to depict operations or objects of basic knowledge. Progressive step-type or exploded-view illustrations, or a combination of both, shall be used when practical in lieu of lengthy narrative text. If equipment to be illustrated is subject to frequent engineering changes, it is permissible to use one figure that presents a typical view of the subject. The title of such a figure shall contain the word "typical."

3.1.6 Manuscript copy for review. Conditions covering submittal of manuscript (or draft) copy for preliminary review for use as interim editions or for preliminary issues for training or other early uses shall be as specified in MIL-M-38784.

3.1.7 Final manuscript. Preparation of the final typed manuscript shall be as specified in AR 310-3, chapter 2, and submitted to The Adjutant General through the COR.

3.1.7.1 Reproducible (camera-ready) copy. Camera-ready copy of the text for Department of the Army publications will not be prepared for submission to The Adjutant General without prior approval. In special cases, and where such prior approval has been obtained, preparation of reproducible copy, including mechanized methods, leading and spacing, page sizes, reproduction areas, headings, indentation, and so forth, shall be as specified in MIL-M-38784 or as directed in the statement of work portion of the contract. Figures 1, 2, and 3 show examples of typical format, layout, print sizes and style, and leading and spacing of tables and illustrations.

3.1.8 Artwork. The preparation of artwork, including photographs, illustrations, line drawings, continuous tone artwork, retouching, mounting, cropping, callout lines, and so forth, shall be as specified in MIL-M-38784. Examples of callout lines are shown on figures 4 and 5.

3.1.8.1 Illustration composition. In composing the parts of an illustration, the handling of the subject is dependent upon the purpose of the illustration. The subject of the illustration shall be displayed to the best advantage consistent with the illustration's purpose and the limitations of the drawing methods used. If possible, illustration subjects should be displayed from a normal viewing position. A drawing that views an isolated part from an unnatural angle may confuse the reader. When it is necessary to show a detail that cannot be viewed from its natural position some type of orientation or identification view should be used.

3.1.8.2 Color in artwork. Shading, patterns, crosshatching, dots, and so forth, in black and white, shall be used in lieu of colors on original artwork and halftones.

3.1.8.3 Integral typography. Lettering and type on original artwork shall be well-defined and large enough to be easily read when the illustration is reproduced at page size. Lettering and type shall be in capital letters of a sans serif style and shall be at least a 6-point type size on the printed page. A desirable minimum is 8 points. Spacing of letters and words shall be controlled to insure clear, legible copy.

3.1.8.4 Keys for illustrations. Keys shall, where feasible, be included on the illustration (figures 4, 5, and 6). Where keys are too numerous or the explanations too lengthy to fit within the illustration cropped area without crowding, they shall be placed in tabular form immediately above or below the illustration (figures 2 and 3) or on the facing page. These tables shall be considered as a text function.

3.1.9 Revisions and changes. Revisions or changes shall be handled as specified in MIL-M-38784. The manual shall be revised or changed throughout the life of the contract when it becomes necessary for the following reasons:

a. Transportability purposes.

b. To cover production changes.

c. To cover new models.

d. To cover significant errors in text.

e. To reflect engineering changes.

f. To make corrections or improvements generated through reviews by the Govenment.

3.2 Contents and format. Minimum information and format for all-mode transportability guidance technical manuals shall be as follows:

a. Cover/Title Page

b. Table of Contents

c. List of Illustrations

d. Chapter 1. Introduction

e. Chapter 2. Transportability Data

(1) Section I. General

(2) Section II. Characteristics and Related Data

f. Chapter 3. Safety

g. Chapter 4. Air Transportability Guidance

(1) Section I. General

(2) Section II. Internal Loading Requirements of Cargo Aircraft

(3) Section III. Internal and External Loading Requirements of Helicopters

(4) Section IV. Loading Requirements of Other Aircraft

h. Chapter 5. Highway and Off-Road Transportability Guidance

(1) Section I. General

(2) Section II. Self-Delivery Requirements

(3) Section III. Truck, Trailer, or Semitrailer Loading Requirements

i. Chapter 6. Marine and Terminal Transportability Guidance

(1) Section I. General

(2) Section II. Shiploading Requirements

j. Chapter 7. Rail Transportability Guidance

(1) Section I. General

(2) Section II. Rail Loading Requirements

Appendixes

3.2.1 Cover/title page. The reproducible copy for the front cover/title page shall be in accordance with MIL-M-38784.

3.2.2 Table of contents. The table of contents shall list all chapters, sections, and appendixes by number and title and show the first page number of each.

3.2.3 List of illustrations. When a transportability guidance manual includes 10 or more illustrations, a list of illustrations shall follow the table of contents.

3.2.4 Chapter 1, introduction. This chapter shall include the following:

3.2.4.1 Purpose and scope. This section or paragraph shall state why the manual was prepared, what areas it covers, who shall use it, and when it is to be applied.

3.2.4.2 Recommending improvements. This paragraph shall be worded approximately as follows: "The reporting of errors, omissions, and recommendations for improving this manual by the individual user is encouraged. Reports should be submitted on DA Form 2028, Recommended Changes to Publications and Blank Forms, or in a letter, and mailed to Director, Military Traffic Management Command Transportation Engineering Agency, ATTN: MTT-TRP, PO Box 6276, Newport News, VA 23606."

3.2.4.3 General. This paragraph shall contain a general description of the item to be transported. Where the item consists of several components, as in a missile system, each vehicle, trailer, or other component will be briefly described.

3.2.4.4 Definition of warnings, cautions, and notes. This paragraph shall contain definitions of warnings, cautions, and notes as given in AR 310-3 or as stated in sample transportability manuals furnished the contractor through the COR.

3.2.5 Chapter 2, transportability data. This chapter shall include all characteristics and data that influence the transportability of the item, system, or series. The chapter shall consist of sections and paragraphs, as necessary, to cover the following:

3.2.5.1 Section I, general. This section shall introduce the reader to the item of materiel, which may be a single item or a system or series. It will include a description of the item and its intended use, as well as identification photograph(s) and side and end elevation drawings. Differences in models, if applicable, and other pertinent general information will be provided. The reader shall be referred to operator and organizational maintenance manuals and other pertinent publications listed in the appendix entitled "References" for additional descriptive and technical information concerning the subject item.

3.2.5.1.1 Identification photographs. A three-quarter front or rear view photograph of the item(s) shall be included in the technical manual. The photograph shall be of the item in its operational configuration and shall be devoid of detracting or cluttered backgrounds. The identification

photograph shall be the first figure in the manual and should cover at least one-half of a printed page. In the event the manual provides transportability guidance for more than one model of the item and if, for transportability purposes, the items are considered practically identical, only one identification photograph is required. Illustrations of different models shall be included only when they exhibit significant external differences.

3.2.5.1.2 Line drawings. Side and end elevation drawings (paragraphs 3.2.5.1.2.3 and 3.2.5.1.2.4) shall reflect the item in its reduced (sectionalized) configuration with removable portions of the operational configuration indicated by phantom lines, as in figures 4 and 5. Drawings shall be prepared in accordance with those general practices outlined in MIL-STD-100. Abbreviations used shall be in accordance with MIL-STD-12 for drawings and AR 310-50 for text.

3.2.5.1.2.1 Scale. The side and end elevation drawings shall not be to any specific scale but shall be illustrated in a manner to provide proper proportion and ready identification of the item they represent. Size of the item shall be indicated by use of a graphic (bar) scale. Each view will, if necessary, be reduced or enlarged from the original artwork in order to be displayed as large as possible on the printed page and will be the only material on that page. The side elevation of tracked and wheeled vehicles will be presented broadside on the page; the end elevation may be either vertical or broadside on the page.

3.2.5.1.2.2 Dimensional data. All dimensions for transportability features will be shown in inches to the nearest 1/10 of an inch, followed, in parentheses, by the metric equivalent in meters to the nearest centimeter. For example:

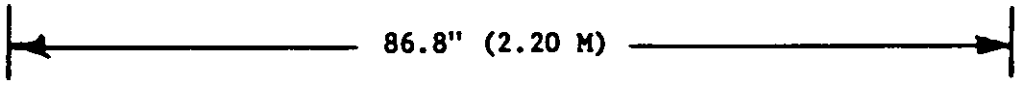

For small dimensions of less than 1 inch, the metric equivalent will be given in millimeters. Conversion tables, if applicable, may be included in the appendixes.

3.2.5.1.2.3 Side elevation. Side elevation drawings shall depict the left side (driver's left side) of a vehicle or trailer (see fig 4). Either side of nonvehicular equipment may be shown, but the side with the greater number of projections or other irregularities that would make securing of the item difficult is the preferable side to illustrate. Side elevation drawings shall show the location and capacity of lifting and tiedown points and give overall height and length dimensions. The following dimensions, if applicable, shall also be shown:

a. Horizontal dimensions.

(1) Distance between centerlines of axles.

(2) Distance from end to centerline of nearest axle.

(3) Overall reduced length. Annotate "reduced" or "reducible to."

(4) Length of ground contact for tracked items. Annotate "ground contact length" immediately below the dimension line.

(5) Horizontal location of center of gravity.

(6) Other applicable or special dimensions, such as significant profile changes, locations of kingpin and landing gear on semitrailers, or centerline of bogie assemblies or drive (sprocket) wheel.

b. Angular dimensions.

(1) Angle of approach and angle of departure.

(2) Ramp crest angle, to determine clearance between ramp crest and underside of (generally long wheelbase) vehicle.

c. Vertical dimensions.

(1) Center of gravity: vertical location.

(2) Ground clearance. Show location and distance from lowest part of undercarriage to ground level.

(3) Overall reduced height. Annotate "reduced" or "reducible to."

(4) Other applicable or special dimensions, such as significant profile changes, or height to lunette or gooseneck of semitrailer.

3.2.5.1.2.4 End elevation. The end elevation drawing that will best illustrate the major projections or contours shall be included (see fig 5). This drawing shall show the location and capacity of lifting, towing, and tiedown points and the overall width dimension. The following dimensions, if applicable, shall also be shown:

a. Distance between inside or outside edges of tracks or wheels.

b. Distance between centerlines of left and right tracks, wheels, or set of dual wheels.

c. Width of one track or wheel or set of dual wheels.

NOTE: Either item b or c above is required, not both; when used with item a above, the missing dimension can be calculated.

d. Overall reduced width. Annotate "reduced" or "reducible to."

e. Ground clearance. Show height dimension between ground and lowest part of vehicle underbody.

f. Location of transverse center of gravity, if other than on centerline.

g. Other applicable or special dimensions, such as significant profile changes, height of towing pintle, truck bed, or fifth wheel, or width of cab.

3.2.5.2 Section II, characteristics and related data. This section shall present in tabular form those item characteristics and related data that may be of use in the analysis of the item's transportability. Differences in models, if applicable, shall be provided. This section shall contain the following data:

3.2.5.2.1. General. The applicable portions of the following data shall be included in this general paragraph:

a. Nomenclature.

b. National Stock Number.

c. Line Item Number.

d. Tires: (wheeled vehicles)

(1) Number of tires, size, and ply.

(2) Pressure.

(3) Footprint data.

e. Ground pressure: (tracked vehicles)

(1) Unloaded (curb weight).

(2) Loaded, combat.

(3) Ground contact area.

(4) Type of track.

(5) Weight distribution to bogie wheels.

f. Speed range:

(1) Unloaded.

(2) Loaded, highway.

g. Turning radii over front bumper (projection).

(1) Right.

(2) Left.

h. Undercarriage clearance. For towed vehicles, this information is to be provided with and without the prime mover.

3.2.5.2.2 Dimensions and weight. Applicable portions of the following data shall be included:

a. Dimensions and shipping data:

(1) Length, operational.

(2) Length, reduced* or crated.

(3) Width, operational.

(4) Width, reduced* or crated.

(5) Height, operational.

(6) Height, reduced* or crated.

(7) Area, operational.

See note at bottom of following page.

(8) Area, reduced* or crated.

(9) Volume, operational.

(10) Volume, reduced* or crated.

(11) Center of gravity:

(a) Above ground.

(b) From centerline of front axle.

(c) From centerline of drive sprocket.

(d) From centerline of kingpin.

(e) From front end of nonvehicular items.

b. Weights:

(1) Unloaded (curb weight):

(a) On front axle.

(b) On rear axle(s) or bogie.

*NOTE: "Reduced" denotes removal, retraction, or folding of vehicle or item components to minimize shipment profile. While varying degrees of reduction are possible, dimensional reduction of vehicles for logistical moves is generally limited to measures that can be readily performed at the organizational level and do not impair the mobility of the vehicle. Reduction may include folding down windshield, folding back or removing side mirrors, and/or removing such items as tailpipe extension, cargo body tarpaulin and bows, side racks, spare tire or wheel, or similar protruding parts. Removed components must be packaged or bundled and shipped in, on, under, or near the vehicle from which they were removed.

(c) On kingpin or bogie.

(d) On landing gear or bogie.

(e) Total.

(2) Loaded, highway:

(a) Front axle.

(b) Rear axle(s) or bogie.

(c) Kingpin or bogie.

(d) Landing gear or bogie.

(e) Total.

(3) Loaded, cross country:

(a) Front axle.

(b) Rear axle(s) or bogie.

(c) Kingpin or bogie.

(d) Landing gear or bogie.

(e) Total.

(4) Loaded, combat:

(a) Front axle.

(b) Rear axle(s) or bogie.

(c) Total item.

(5) Nonvehicular items:

(a) Crated.

(b) Uncrated.

3.2.5.2.3 Unusual characteristics. The following, when applicable, shall be included:

a. Resistance to environmental elements and conditions.

b. Limits on the attitude of the item during transportation.

c. External power requirements.

3.2.5.2.4 Hazardous and dangerous characteristics. This paragraph shall include hazardous and dangerous characteristics of the item to other commodities or to personnel.

3.2.5.2.5 Fragility. This paragraph shall include the fragility rating of the item to be transported, in terms of allowable acceleration and pulse time; or the allowable amplitude-frequency envelope for both short and extended periods.

3.2.5.2.6 Applicability. Information shall be included to identify applicability (or compatibility) of the items, with or without sectionalization, and precise identification of hazardous and/or dangerous characteristics such as explosive, chemical, radioactive, and so forth. Regulatory controls that indicate compatibility for transport with other dangerous or hazardous materials will also be identified.

3.2.5.2.7 CONUS freight classification. This paragraph will consist of the following statement: "The determination of appropriate rail and motor freight classification descriptions and proper classification item numbers is the responsibility of the installation transportation officer issuing the bill of lading for shipment of the item(s)."

3.2.6 Chapter 3, safety. This chapter shall identify general safety considerations and precautions for the transport of the item. Hazardous and/or dangerous characteristics that would endanger personnel, material, carrier vehicle, or military or civilian communities shall have emphasis in the form of warnings, cautions, and notes.

3.2.6.1 Specific safety requirements. Pertinent safety requirements for an individual mode of transportation shall be identified in order of severity in the relevant chapter.

3.2.6.2 Dangerous material considerations. The following information will be presented, as applicable, for each item classified as dangerous material:

The US Department of Transportation (DOT) class.

The DOT article (name).

Venting requirements.

Grounding requirements.

Towing speed.

Protective clothing requirements.

Medical

Firefighting

Disaster response force requirements.

Security

Quantity distance class and storage compatibility group(s).

Any other information deemed pertinent.

3.2.7 Chapter 4, air transportability guidance.

3.2.7.1 Section I, general. This section shall contain only transportability guidance of a general nature but shall list the types or models of aircraft suitable for transporting the item. Any characteristics of the item that limit air transport shall be identified. Guidance that relates to a specific air transportability area shall be contained in section II or III of this chapter. References, as applicable, shall be made to data contained in chapter 2, Transportability Data. Sectionalization requirements for specific aircraft loadings shall also be described in section II or III of this chapter and statistical data presented in the sectionalization section of chapter 2. Material presented in this section shall cover significant technical and physical characteristics; safety considerations; and prescribe the manpower, materials (quantity and type), and time required to prepare, load, tie down, and unload the item to be transported as internal loads on US Army, US Air Force, or applicable commercial aircraft.

3.2.7.1.1 Maximum utilization of aircraft capacity. This section shall contain a statement indicating whether the item being transported is a maximum load for the particular aircraft in accordance with applicable regulations, or whether additional cargo and/or personnel may be transported within the allowable load limits identified.

3.2.7.1.2 Safety. Include specific safety precautions peculiar to air transport that are in addition to the general safety requirements of chapter 3. They shall be identified in order of severity; that is, the item with the greatest hazard potential first and the least hazard

potential last. The provisions of TM 38-250 shall be followed when dangerous materials are transported by military aircraft.

3.2.7.1.3 Preparation of item. Identify preloading preparation of the item to insure compatibility of loading commensurate with the type and phase of airborne operation.

3.2.7.2 Section II, internal transport by cargo aircraft. This section shall identify the materials (quantity and type) and procedures required for loading and tying down the item(s) with the minimum restraints required for each type of airplane to be loaded. There shall be plan view tiedown diagrams depicting the tiedown locations on the item(s) and the tiedown fittings used for securing each load. There shall be a legend block for each tiedown diagram indicating nomenclature of the item, direction the item is facing in relation to the aircraft, location by aircraft station number of the item reference point, and location by aircraft station number of the center of gravity of the item loaded. Figure 8 shows typical information and layout. Each tiedown fitting designation and rated capacity, tiedown device type and rated capacity, and where each tiedown device is attached to the item being restrained should be shown. Figure 9 shows typical tiedown data table.

3.2.7.2.1 Shoring. Shoring is required any time the contact pressure (pounds per square inch) of the item being loaded approaches the rated unit floor loading capacity of the aircraft. The shoring shall be described in this section. Plans for concentrated and distributed loads shall be prepared on an individual basis to assure that the floor loading limits

established by the manufacturer and/or applicable specifications for the particular aircraft are not exceeded.

3.2.7.2.2 Restrictions. Each transportability guidance manual shall identify flight restrictions for dangerous and/or hazardous materials that require immediate ejection when preestablished conditions or limits are reached. These restrictions normally include but are not limited to a maximum altitude and airspeed to afford an environment for immediate extraction or jettison.

3.2.7.2.3 Application of tiedown devices. Any tiedown device restraining a load shall not be attached to an aircraft fitting of lesser rated capacity. The restraining capability of the tiedown device shall be computed and described for each of three directions of applied force (longitudinal, lateral, and vertical) based on the angles of attachment to the cargo (fig 10).

3.2.7.2.4 Pallet loading. Whenever practical, all loads except wheeled or tracked vehicles shall have guidance procedures for securement to pallets, as loading and unloading palletized cargo can be performed quickly.

3.2.7.3 Section III, internal and external transport by helicopter. This section shall identify the materials (quantity and type) and procedures required for loading and tiedown of the item(s) with the minimum restraints required for internal loading and minimum capacity rigging for external (sling) loading.

3.2.7.3.1 Internal loading. This section of the manual shall include a plan view tiedown diagram for each load depicting the tiedown locations on

the item and the tiedown fittings used for securing the load. There shall be a legend block for each tiedown diagram indicating description of item, the direction the item is facing in relation to the helicopter, the location of the center of gravity of the item(s) by aircraft station number and the location of the center of gravity of the loaded helicopter by aircraft station number. Figure 11 shows typical information and layout. Each tiedown diagram shall be accompanied by a table expressing the tiedown fitting designation and rated capacity, tiedown device type and rated capacity, and where each tiedown device is attached to the item being restrained. Figure 9 shows typical tiedown data table. Refer to 3.2.7.2.1 for shoring, 3.2.7.2.2 for restrictions, and 3.2.7.2.3 for application of tiedown devices.

3.2.7.3.2 External loading. Items to be externally transported by helicopters shall be rigged so that the strength of each sling leg is compatible with the item sling provision(s) or eye(s) requirements in the current revision of MIL-STD-209. In addition to safety requirements of chapter 3 of the draft manual, specific safety precautions peculiar to external helicopter transport shall be identified in order of severity. Load stabilizers required, such as drogue chutes or airfoil spoilers, shall be identified by size, type, location, and method of attaching or mounting. A slinging diagram shall be provided depicting rigging materials, assembly, and attachment points (fig 12).

3.2.8 Chapter 5, highway and off-road transportability guidance. This chapter shall include the following:

3.2.8.1 Section I, general. This section shall contain information of a general nature for highway or off-road movement of the item. As applicable, when the materiel being transported exceeds any legal limitation for CONUS or overseas areas, such limitation shall be clearly described and the regulatory control identified. The following statement is a typical example: "The combined length of loaded semitrailer and tractor, 70 feet, exceeds the unrestricted length of 55 feet established by the American Association of State Highway and Transportation Officials and the Limits of Motor Vehicle Sizes and Weights, International Road Federation, Geneva, Switzerland." In transportability guidance manuals covering more than one load, the pertinent limitations shall be identified in the particular paragraph for each load.

3.2.8.1.1 Safety. In addition to the general safety requirements of chapter 3, specific safety precautions peculiar to self-delivery or motor vehicle transport shall be identified in order of severity. Included shall be applicable items listed in 3.2.6.2.

3.2.8.2 Section II, self-delivery. Whenever an item of materiel is considered self-deliverable this section shall be included in the manual. It shall contain, but not be limited to operating range, speed, and special considerations. An example of a special consideration is: "Although the tracks of the M60A2 are rubber bushed, movement over paved public highways will not be attempted without specific approval." Characteristics that exceed limitations in CONUS and oversea areas and requirements for permits or administrative approval will be identified.

3.2.8.3 Section III, transport by truck, trailer, or semitrailer. This section shall contain but not be limited to preparation, loading, blocking, bracing, and tiedown procedures and shall include the type and quantity of materials required. In the event any shipping configuration exceeds limitations of CONUS or oversea areas, a complete description shall be presented with reference to regulatory controls.

3.2.8.3.1 Preparation of item. This section shall describe preparation peculiar to highway transport to include safety, economy, and measures to curtail pilferage en route from origin to destination.

3.2.8.3.2 Reduction of cube for water transshipment. Transportability guidance shall identify reduction to the minimum cube practical affording the most economical rate charges. When not applicable to individual shipments, this procedure may be disregarded by users of the manual.

3.2.8.3.3 Disassembly for route clearances. Whenever practical, guidance shall identify specific reduction required to afford unrestricted movement in CONUS and oversea areas. Unit load integrity shall be maintained insofar as possible; that is, any component or part removed should be placed within the cube of the basic item. In cases where the removed section cannot be placed within the basic outline, the dimensions, cube, and weight of each resulting package shall be presented in chapter 2, Transportability Data, and instructions presented in this chapter to minimize or avert the possibility of consigned cargo becoming separated en route.

3.2.8.3.4 Specialized transport equipment requirements. When applicable, the TM shall identify requirements for special shock and vibration mitigating transport vehicles, such as those equipped with air-cushion or

other special suspension systems. It shall also identify special cargo compartment features required such as temperature limits, pressure limits, humidity limits, power sources, load separators, or hangers.

3.2.8.3.5 Turning radius diagrams. Transportability guidance manuals shall contain a turning radius diagram of the truck, truck-tractor, and semitrailer, or truck-tractor and full trailer combinations of the recommended vehicles. Figure 13 shows format and content.

3.2.8.3.6 Axle loads. Individual axle loads for each combination described in 3.2.8.3.5 shall be identified. For semitrailers, the fifth wheel load shall also be stated.

3.2.8.3.7 Loading. Each highway vehicle load shall be identified by loaded material and model vehicle used. Should any characteristics exceed CONUS or oversea area limitations, they shall be described in the paragraph for that load. Separate paragraphs shall be used for individual loads. These paragraphs shall be followed by subparagraphs for materials, application of materials (both with accompanying table), and loading (with blocking and tiedown diagram as shown in figure 14).

3.2.8.3.8 Bill of materials. The bill of materials shall list the material nomenclature of each item, its description with size, grade, type, and applicable Federal Specification or Standard reference, and the quantity of linear footage requirements for restraint of the item on the transporting vehicle. (See portion identified as table 7-1 of fig 2 for typical information and layout.)

3.2.8.3.9 Blocking and tiedown diagram. Blocking and tiedown diagrams shall present a loading arrangement utilizing, where feasible, commercially available restraint devices and materials that will provide adequate restraint against forces encountered during movements.

3.2.8.3.10 Application of materials. Each blocking and tiedown diagram shall be accompanied by a table describing the application of materials. (See portion identified as table 7-2 of fig 2.) The table shall be indexed to the blocking and tiedown diagram and shall identify the quantity required and steps necessary to insure proper installation. Where general instructions apply they shall be listed at the bottom of the table immediately following the last indexed entry.

3.2.9 Chapter 6, Marine and terminal transportability guidance. This chapter shall include the following:

3.2.9.1 Section I, general. This section shall contain information of a general nature pertinent to preparation, handling, and in-transit stowage of an item of materiel moving through marine terminals, shipboard loading, and securement aboard ship.

This chapter shall provide procedures for movement of the item by break-bulk, container, and barge-carrying off-shore-discharge types of ships.

3.2.9.1.1 Safety. In addition to the general safety requirements of chapter 3, specific safety precautions pertinent or related to terminal and marine shipment shall be identified including applicable items listed in 3.2.6.2. Whenever applicable, reference shall be made to pertinent DOD and DOT regulations.

3.2.9.1.2 Alternate methods. At ports where normal stevedoring procedures result in a satisfactory stow, portions of the guidance offered in this chapter may not be utilized. Chapter 6 shall, therefore, contain as a NOTE the following statement:

NOTE

The methods described in this chapter for lifting and securing vehicles are recommended procedures. Other methods of handling and stowage may be used provided they insure safe delivery without damage.

Rationale for the note is that procedures currently used under contracts with stevedoring labor organizations at commercial terminals and outports may be continued with less economic impact than would be incurred by modifying contracts to include specific procedures described in the manual.

3.2.9.2 Section II, loading. This section shall provide adequate transportability guidance including but not limited to the following:

3.2.9.2.1 Reduction. All materiel shall be sectionalized or reduced to the minimum cube feasible, thereby affording the most economical rate commensurate with operational commitment and oversea/land transportation clearances.

3.2.9.2.2 Preservation. Preservation of the materiel shall be in accordance with applicable preservation and packaging regulations and

directives commensurate with terminal environments and types of stowage required onboard ship. Cargo holds and sealed barges offer the maximum protection, while ondeck loading offers minimum protection from the elements and sea conditions. Guidance shall identify any handling restrictions or preparations such as requirements for peeling back a portion of the closure kit or protective cover for access to tiedown or lifting eyes during the loading/unloading process. Where applicable, alternate procedures shall be described.

3.2.9.2.3 Security. Guidance presented shall offer the maximum protection from theft and pilferage without compromising transportability.

3.2.9.2.4 Handling method(s). Procedures for handling materiel shall identify capacities required for shoreside or ship-mounted cranes and booms with recommended sling(s) or sling set(s) and appropriate spreader bars (fig 15). Crated and bulk items shall not be loaded by use of cargo nets unless they are so constructed or packaged that no damage will occur. A diagram shall be prepared for each load to be lifted, showing attachment points and sling arrangement in accordance with MIL-STD-209. Materials handling equipment shall be identified by type and capacity required. Self-propelled vehicles that can be loaded onto ships and vessels (that is, barges, roll-on/roll-off, or seatrain) under their own power, with or without a towed load, shall be described with applicable notes or cautions. Description of containerized cargo shall be compatible with current terminal and shipboard loading facilities for handling container cargo. Critical clearances aboard a specific type of vessel that are probable or definite

problem areas shall be described. Nonstandard practices and material shall be identified; for example, double boom rigging of an item larger than the hatch opening, requiring one end to be lowered first and swung under top deck(s) to allow the other end to be lowered through the hatch.

3.2.9.2.5 Stowage. The recommended stowage for each load shall be described including dunnage (decking, double decking, jacks, frames, blocking, bracing, bulkheads, overstow decking, or tomming) and size and types of materials required to obtain a secure stow. For vehicles and self-contained items equipped with tiedown provisions, detailed instructions shall be provided for application of tiedown devices to appropriate tiedown fittings installed in the cargo holds. Tiedown arrangements shall be prescribed when practical. Should existing tiedown fittings be unsatisfactory in capacity, angle of restraint, interference with other cargo, and so forth, specific instructions shall be provided for the placement and installation of appropriate fittings.

3.2.9.2.6 Bill of materials. The bill of materials shall list the material nomenclature of each item, its description, size, grade, type, the applicable Federal Specification or Standard reference, and the quantity or linear footage requirements for restraint of the item. (See figure 2 for typical information and layout.)

3.2.9.2.7 Blocking and tiedown diagram (marine modes). The blocking and tiedown diagram for each item of equipment shall present a loading arrangement utilizing, where feasible, commercially available restraint devices and materials that will provide adequate restraint against forces encountered during movements.

3.2.9.2.8 Application of materials (marine modes). Each blocking and tiedown diagram shall be accompanied by a table describing the application of materials. (See portion identified as table 7-2 of fig 2.) The table shall be keyed to the blocking and tiedown diagram and shall identify the quantity required and steps necessary to insure proper installation. Where general instructions apply they shall be listed at the bottom of the table immediately following the last indexed entry.

3.2.10 Chapter 7, rail transportability guidance. This chapter shall include procedures that provide uniform, safe, and economical methods of loading railway cars.

3.2.10.1 Section I, general. This section shall contain information of a general nature for rail transportation. As applicable, when materiel being transported exceeds any limitation for CONUS or oversea areas, such limitation shall be clearly described and the regulatory control identified. Disassembly of outsize or overweight materiel required to comply with individual railway clearance limitations shall be identified in the particular paragraph for each load. Handling restrictions resulting from disassembly and/or preservation requirements shall be identified with alternate provisions applicable to the specific load.

3.2.10.1.1 Safety. In addition to the general safety requirements of chapter 3, specific safety precautions peculiar to rail transport shall be identified in order of severity, including applicable items listed in 3.2.6.2.

3.2.10.1.2 Security. Guidance presented shall offer the maximum protection from theft and pilferage without compromising transportability.

3.2.10.2 Handling methods. Information shall be provided for any piece of materiel that requires special sling arrangements or spreader bars necessary to protect soft points or maintain load attitude during lifting operations for rail loading.

3.2.10.2.1 Crane loading and unloading. Each load to be sling-loaded by crane or hoist shall comply with hoisting and slinging procedures for the item(s) required by paragraph 3.2.9.2.4.

3.2.10.2.2 Forklift loading and unloading. Loads most easily or economically loaded or unloaded with forklift trucks of adequate capacity shall be identified, with operations to be performed in a manner that will not constitute a hazard to personnel, rail equipment, or cargo.

3.2.10.2.3 Ramp requirements. Should any item of materiel require a specific type of ramp for loading and unloading, such ramp shall be described in detail identifying strength requirements, angle of incline, method of attaching to railcar, and any special features.

3.2.10.3 Rail equipment requirements. When specialized or specific rail equipment is required for an item to be transported, the special equipment characteristics or the type of car required shall be identified.

a. Flatcars shall be identified by load capacity, length, width, platform height, and cushioning requirements.

b. Boxcars shall be identified by load capacity, inside length, width, height, door opening, and cushioning requirements.

c. Gondola cars shall be identified by inside width and length, height of sides, type of floor, drop end or solid, and cushioning requirements.

d. Special cars, such as chain-equipped, Trailer-on-Flat-Car (TOFC) hitch, rub-rail, or multilevel (used for trailers and vehicles) shall be identified to assure compatibility with the item being transported.

e. Use of Department of Defense (DODX) boxcars with Damage Free (DF) loading equipment, and resultant economic benefits, shall be considered when boxed, palletized, or other items of suitable configuration are to be transported.

3.2.10.4 Section II, rail loading requirements. This section shall provide necessary transportability information of the item with materials, quantity and type, and procedures required for loading and tiedown in accordance with the current CONUS and STANAG, CENTO, and SEASTAG agreements, and commercial standards. See figures 2 and 3.

3.2.11 Appendixes. Appendixes are used when it is necessary or helpful to the reader to furnish additional or supplemental material not a part of the main body of the publication; for example, a list of related reading material (references), glossaries, or conversion tables to the metric system of measurement. Appendixes, if used, will be placed at the end of the text. Lettering, headings, and page numbering of the appendix(es) shall be in accordance with MIL-M-38784.

3.2.12 Single-mode manuals. Manuals covering only one mode of transportation will include, in appropriate section or paragraphs, the applicable portions of 3.2.1 through 3.2.11, above.

4. QUALITY ASSURANCE PROVISIONS. The requirements of MIL-M-38784 are applicable.

5. PREPARATION FOR DELIVERY

5.1 Packaging. Unless otherwise specified, the material furnished the procuring activity in accordance with this specification shall be packaged as follows:

5.1.1 Manuscript copy. Manuscript copy shall be packaged flat in containers suitable for mailing. The artwork and text material may be separated in one container or may be in separate containers. Copies of large artwork forwarded for review purposes may be folded. The containers shall provide reasonable protection against shipping damage.

5.1.2 Reproducible copy. Reproducible copy shall be packed flat and double packaged. Artwork shall not be folded or rolled except as permitted in 5.1.4 below. The interior material shall be waterproof and free of any chemical substance that would discolor or otherwise damage the reproducible copy. The exterior material shall provide protection against possible shipping damage.

5.1.3 Classified material. Classified material shall be packaged in accordance with DOD 5220.22-M.

5.1.4 Original artwork. When the procuring activity requires that the original artwork be furnished, it shall be packaged without folding, in a container suitable for mailing unless otherwise specified; for example, if an original oversize line drawing is on vellum or tracing cloth it may be rolled.

5.2 Mailing container information. In addition to sender and addressee information, the exterior of each container shall bear the following:

Publication identifying number.

Contract or purchase order number.

The term "Manuscript Copy," when applicable.

The term "Reproducible Copy," when applicable.

Number of containers in shipment and the sequential number of the specific container; for example, box 1 of 3.

5.3 Packing list. A copy of the letter of transmittal, or the packing list, shall be placed inside the mailing carton or container. When a shipment consists of several containers, the letter of transmittal or packing list shall be inclosed in the number 1 container and shall identify the material that was packed in each container.

6. NOTES.

6.1 Intended use. Transportability guidance technical manuals prepared in accordance with the general style and format requirements of this specification are intended for use in shipment of equipment that is in military service by all modes of transportation; that is, air, highway, water, and rail.

6.2 General. The provisions of paragraph 6, NOTES, of MIL-M-38784 shall apply. Where references to other paragraphs of MIL-M-38784 conflict with this specification, the provisions of this specification shall apply.

6.3 Additional information. When transportation requirements of an item present problems or cases not covered by this specification or the listed

references, additional information or guidance may be obtained from the proponent agency or by contacting the Director, Military Traffic Management Command Transportation Engineering Agency, PO Box 6276, Newport News, VA 23606 (AUTOVON 927-4292, 927-3709, or Commerical 804-595-7852).

Preparing Activity:

Army - MT

Custodian:

Army - TM

Review Activities:

Army - AT, AV, CE, EL, ME, MI, TM, WC

Project TMSS - A103

CHAPTER 6

MARINE AND TERMINAL TRANSPORTABILITY GUIDANCE

Section I. GENERAL

6-1. Scope

This chapter provides marine and terminal transportability guidance for movement of the Shillelagh guided missile system. It covers significant technical and physical characteristics and safety considerations and prescribes the materials and guidance required to prepare, load, tie down, and off-load the vehicles.

6-2. Safety

In addition to the safety precautions contained in chapter 3, the following areas should be noted as applicable:

a. The activity offering the vehicle for transport will notify the carrier in the event ammunition or explosives are to be transported with the vehicle and compliance with AR 55-228, paragraph 2-7, is mandatory.

b. Ammunition and vehicles will be handled and stowed in accordance with provisions contained in Water Carrier Tariff No. 24 or reissues thereof entitled *Regulations Governing the Transportation of Explosives or Other Dangerous Articles or Substances, and Combustible Liquids On Board Vessels.* Fuels tanks of vehicles must not be more than one-fourth full.

c. Fire extinguishers must be available during all loading and off-loading operations.

6-3. Water Shipment

The vehicles can be transported by a great variety of inland-waterway cargo carriers and lighters and by all seagoing cargo vessels.

NOTE

The methods described in this chapter for lifting and securing vehicles are suggested procedures. Other methods of handling and stowage may be used provided they will insure safe delivery without damage.

Section II. LOADING AND SECURING

6-4. General Rules for Stowing Tracked Vehicles

a. General. Whenever possible, vehicles should receive the protection of below-deck stowage. In general, good stowage of vehicles means having them placed fore and aft as close together as practical, with minimum spacing between outer vehicles and the sweatboards; breakable parts protected and noting the disposition of spare parts, usually within or near the vehicles; vehicles stowed in neutral with brakes off; battery terminals disconnected; fuel drained; and vehicles secured by adequate blocking and lashing. Securing includes having tracks blocked on all four sides so that the vehicle cannot move in any direction; individual vehicle blocks braced to bulkheads, stanchions, and other vehicle blocks; and vehicle lashed with wire rope or chain.

NOTE

When vehicles are loaded on vessels which are adequately ventilated by power blowers, such as the roll-on/roll-off vessels, fuel need not be drained from fuel tanks.

b. Loading. Vehicles are always loaded on vessels in their minimum configuration; that is, reduced height, with or without cargo. The vehicles can be loaded onto landing craft, beach discharge and amphibious lighters, and landing ship tanks under their own power or by crane of adequate capacity. The vehicles can also be

Figure 1. Typical leading and spacing of chapters, sections and paragraphs.

be adjusted as required so that a nail for that piece will not be driven through, onto, or right beside a nail in the lower piece of lumber.

Table 7-1. Bill of Materials for Blocking and Tiedown of M551 on General-Purpose Flatcar (Fig 7-1)

Item	Description	Approximate quantity
Lumber	Douglas-fir, or comparable, straight grain, free from material defects; Fed Spec MM-L-751c: 2- x 4-in.	114 linear ft
	2- x 8-in.	8 linear ft
	2- x 12-in.	68 linear ft
Wire rope	6 x 19, IWRC; improved plow steel; preformed, regular-lay; table X, Fed Spec RR-W-410a: ⅝-in.	24 ft
	⅝-in.	70 ft
Clamps	Wire-rope, U-bolt clips, saddled, single-grip, steel, Crosby heavy-duty, or equal; MIL-STD 16842: ⅝-in.	6
	⅝-in.	24
Thimbles	Standard, open-type: ⅝-in.	2
	⅝-in.	8
Nails	Common, steel; flathead; bright or cement-coated; table XI-b, Fed Spec FF-N-105a: 6d	4
	20d	200
	30d	160
Cushioning material.	Waterproof paper, or suitable material.	as required
Steel strapping	1¼-in. x .035-in. thick	3 linear ft
Shackle	Clevis assembly suspension, bolt and nut type, large, FSN 1670-090-5354, or equal.	4

Table 7-2. Application of Materials for Loading and Securing M551 on General-Purpose Flatcar (Fig 7-1, 7-2)

Item	No. required	Application
A		Brake-wheel clearance. Minimum clearance required is 6 in. above, in back of, and on both sides of and 4 in. underneath wheel.
B	2	Chock block (sketch 2, fig 7-2). Locate the incline face of the block against track even with inboard edge at front of vehicle.
C	2	Chock block (sketch 1, fig. 7-2). Locate the incline face of the block against track, even with inboard edge, at rear of the vehicle.
D	4	End cleats. Each consists of two pieces of 2- x 4- x 12-in. lumber. Locate aganist the end of chock block. Secure lower piece to car floor with four 30d nails and the top piece to the one below in like manner.
E	8	Side cleats. Locate one piece of 2- x 4- x 24-in. lumber on each side of items B and C, and secure to car floor with six 30d nails.
F	2	Blocking, inside. Each consists of two pieces of 2- x 4- x 144-in. lumber. Locate along the inside of each track, and nail the lower to car flor with sixteen 30d nails. Nail the top piece to the one below with sixteen 30d nails.
G	3	Spreaders, inside cleat. Each consists of two pieces of 2- x 4-in. lumber x length-to-suit. Locate one between each end and center of item F. Nail lower piece to car floor with six 30d nails. Nail the top piece to the one below with six 30d nails.
H	4	Shackles. Secure one shackle to each towing lug (two at front end of vehicle and two at rear end).
J	8	Thimble. Locate one thimble at each item H and one thimble under each stake pocket.
K	4	Wire rope, ⅝-in. Attach to each item H and stake pockets (as shown in sketch 5, fig 7-2).
L	24	Clamp, ⅝-in. Secure ends of wire rope with four clamps each. Secure thimbles with one clamp each. (See sketches 4 and 5, fig 7-2).
M	1	Support, gun tube. 2- x 8-in. lumber x length-to-suit. Shape top end to saddle gun tube, and place bottom end on frame of vehicle.

Figure 2. Typical leading and spacing of tables.

Table 7-2. Application of Materials for Loading and Securing M551 on General-Purpose Flatcar (Fig 7-1, 7-2)—Continued

Item	No. required	Application
N	2	Wire rope, ⅜-in. Wrap gun tube with cushioning material, and apply in complete loop securing gun tube to lifting eye of vehicle at each side.
O	6	Clamp, ⅜-in. Secure ends of wire rope (item N) with three clamps each.
P	as required	Cushioning material. Wrap gun tube and install item Q.
Q	1	Steel strapping, 1¼- x .035- x 35-in. Locate over gun tube, and secure to each side of item M with two 6d nails.

General Instructions

Loading rules 1-A, 3, 4, 5, 9, 14, 15, 19, 19-A, appearing in section I of the *Rules Governing the Loading of Commodities on Open Top Cars* published by the Association of American Railroads provide applicable guidelines and are mandatory in application.

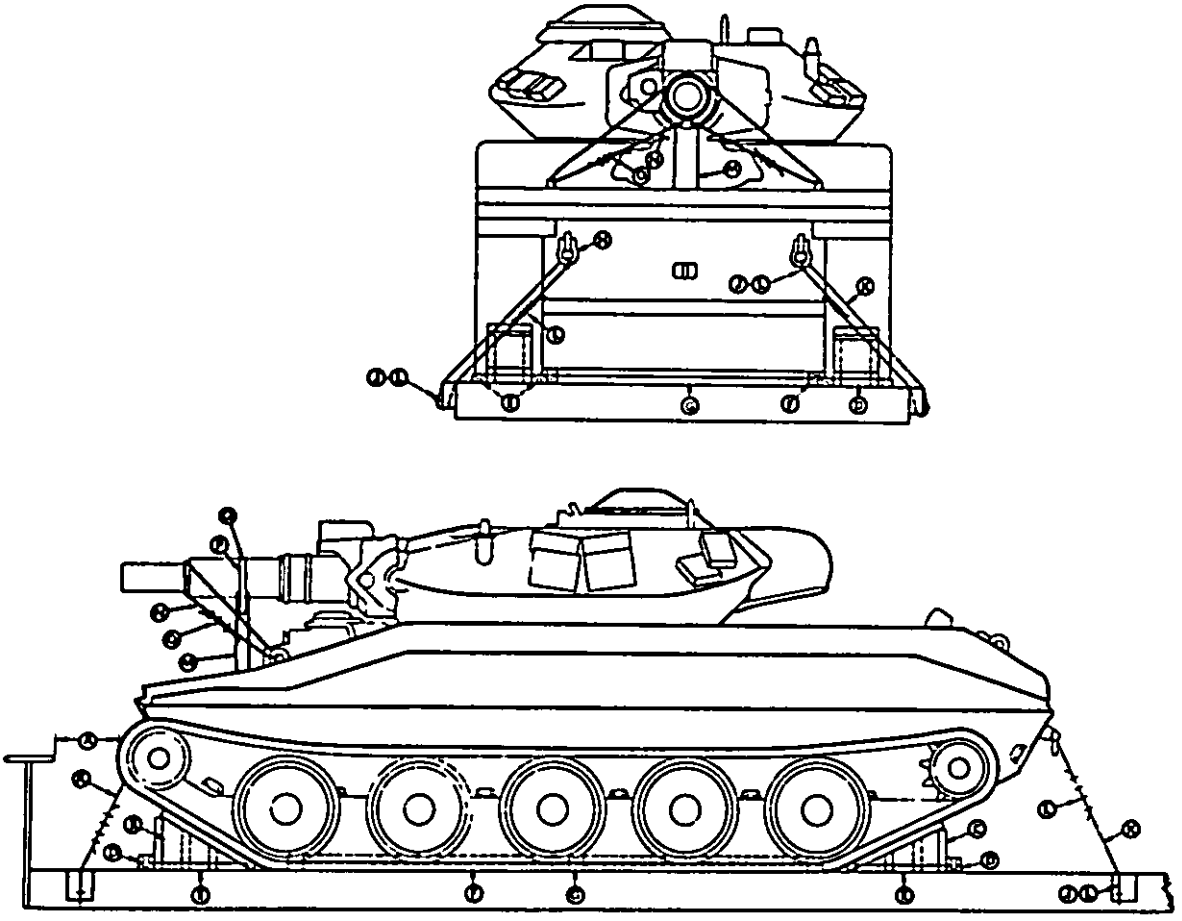

Figure 7-1. Blocking and tiedown for M551 on general-purpose flatcar.

Figure 3. Typical loading and spacing with figure layout immediately following applicable table.

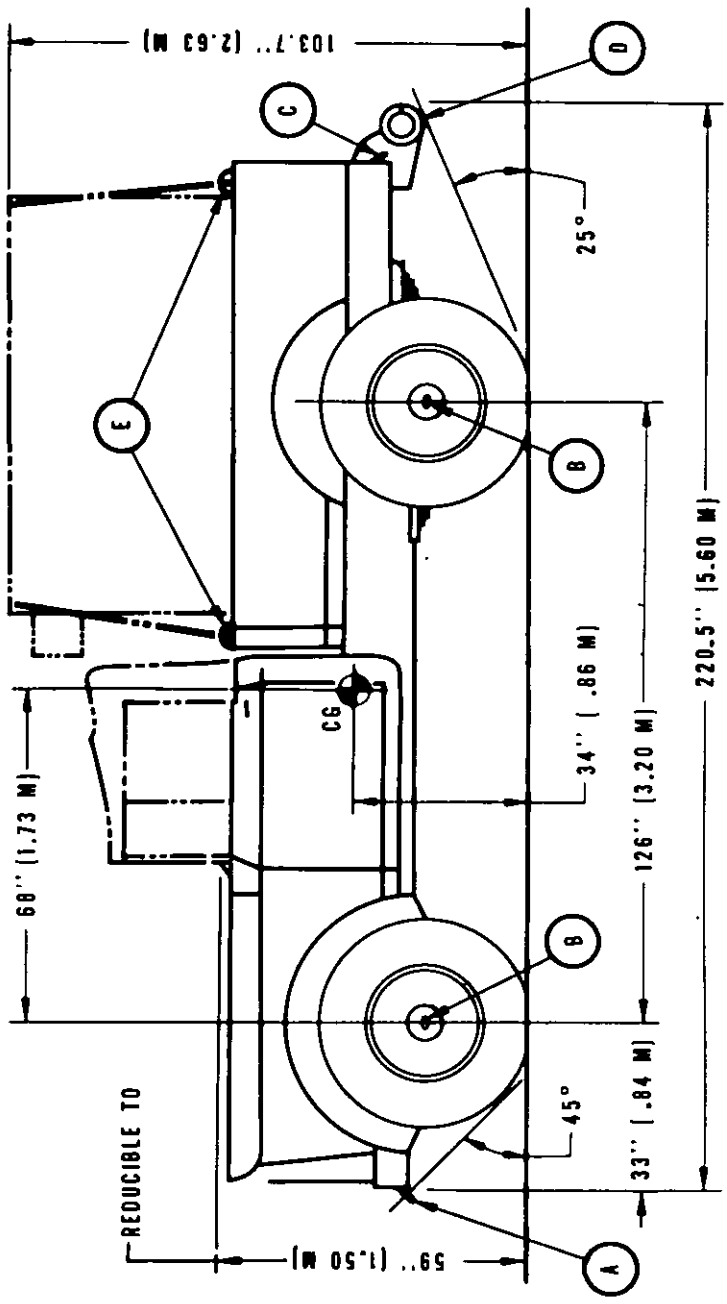

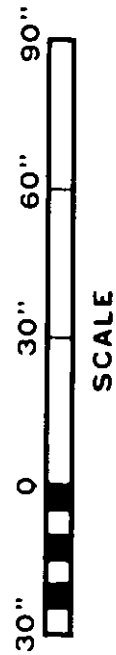

LEGEND

- (A) TIEDOWN CAP, 18000 LB (8165 KG), TWO PLACES
- (B) LIFT CAP, 7000 LB (3175 KG), FOUR PLACES
- (C) TIEDOWN CAP, 10000 LB (4536 KG), TWO PLACES
- (D) PINTLE CAP, 9000 LB (4082 KG)
- (E) LOAD MTG BRKT CAP, 8000 LB (3629 KG), FOUR PLACES

Figure 4. Line drawing showing side elevation layout of item, essential transportability features, legend, scale representation, callout lines, arrowhead placement, and balloon-type index characters.

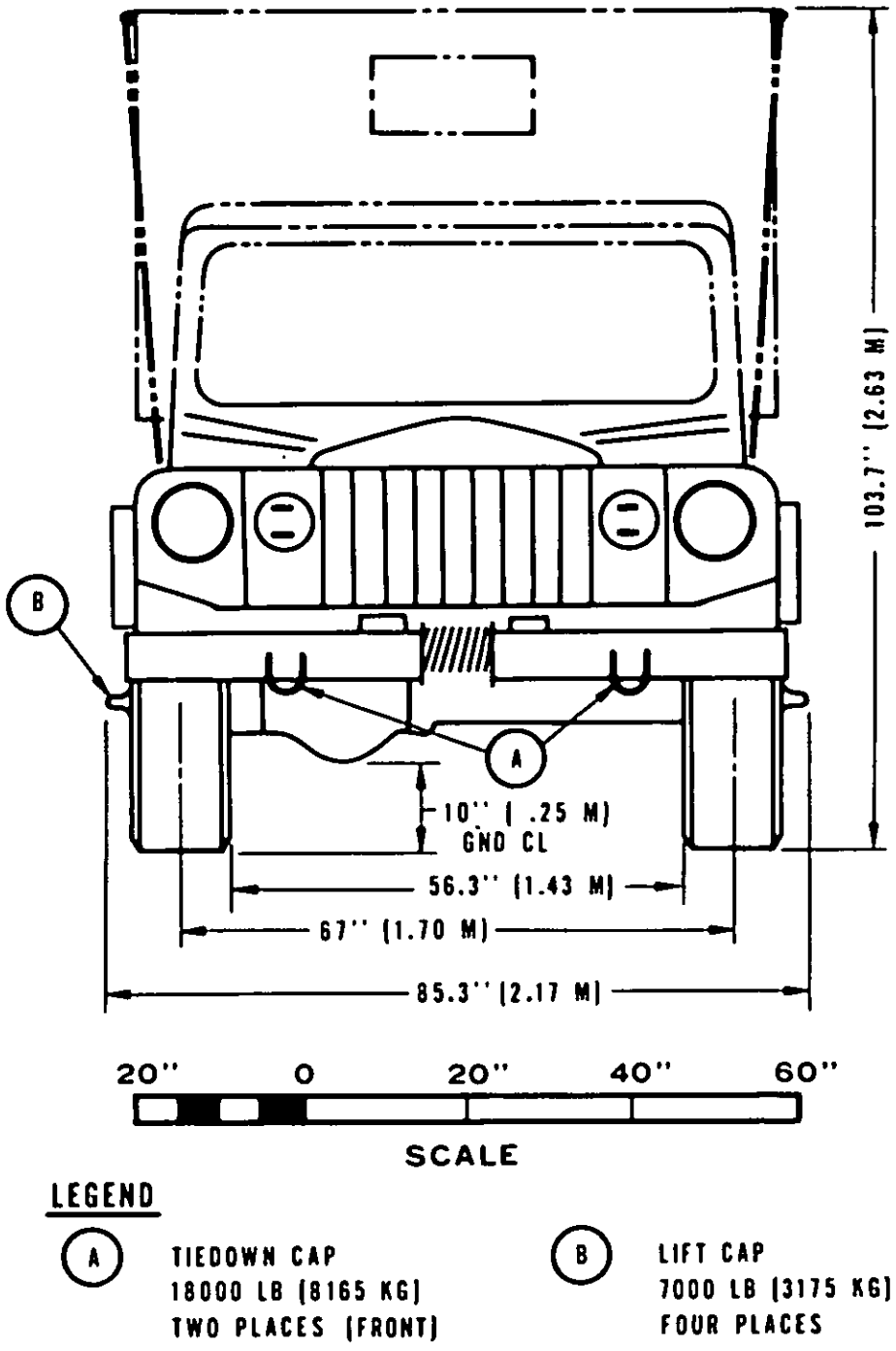

Figure 5. Typical line drawing showing end elevation layout of items, ground clearance, tiedown features, legend and scale representation.

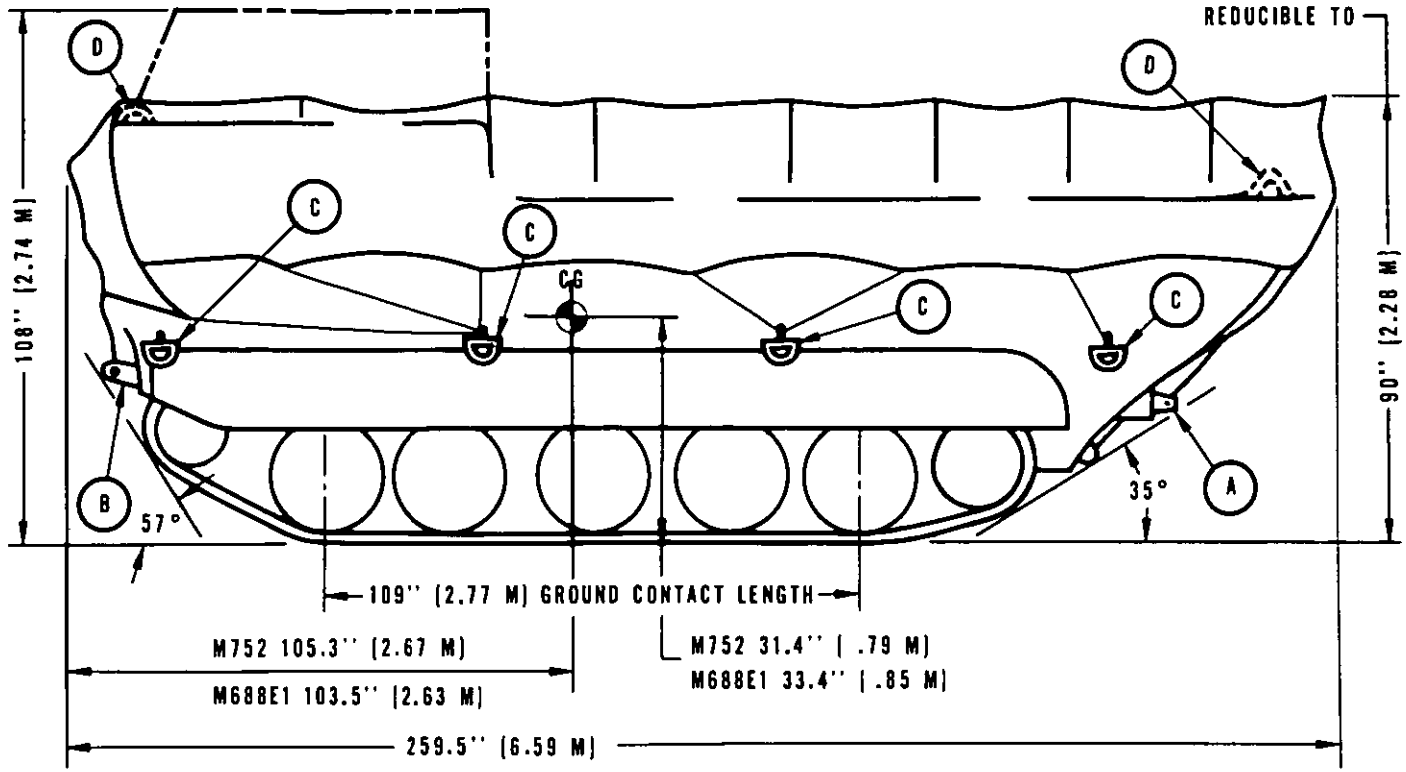

TIEDOWN AND LIFT FITTING CHARACTERISTICS				
TIEDOWN	LIFT	QTY	RATED LOAD LIMIT	DIRECTION
A	—	2	24000 LB (10886 KG)	ANY
B	—	2	24000 LB (10886 KG)	ANY
C	—	8	25000 LB (11340 KG)	ANY
—	D	4	43000 LB (19505 KG)	VERTICAL

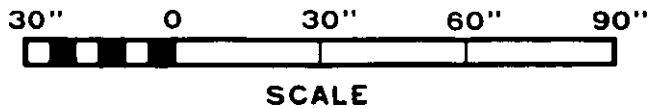

Figure 6. Typical side elevation showing the use of phantom lines indicating operational configuration.

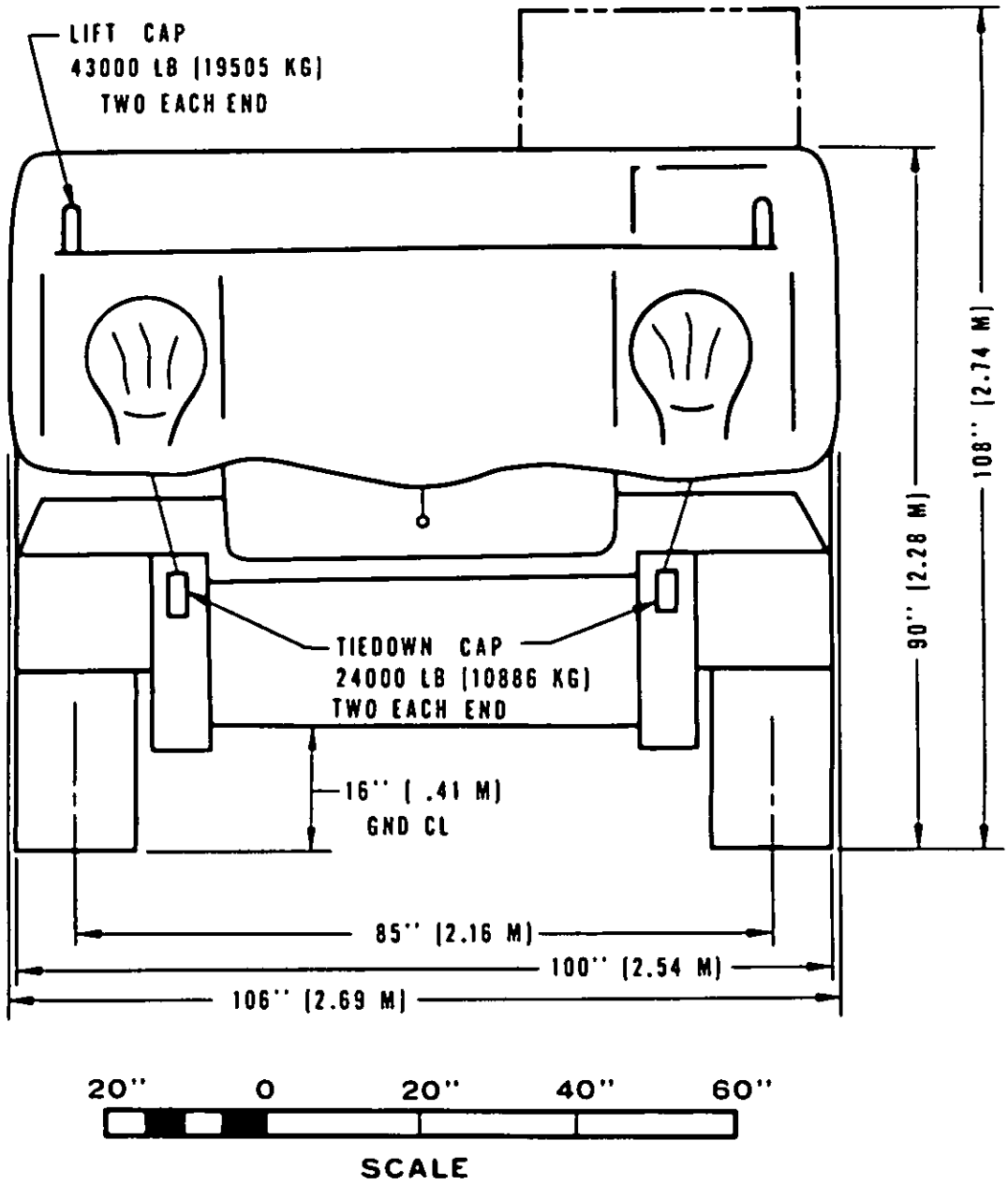

Figure 7. Typical elevation, showing the use of phantom lines indicating operational configuration.

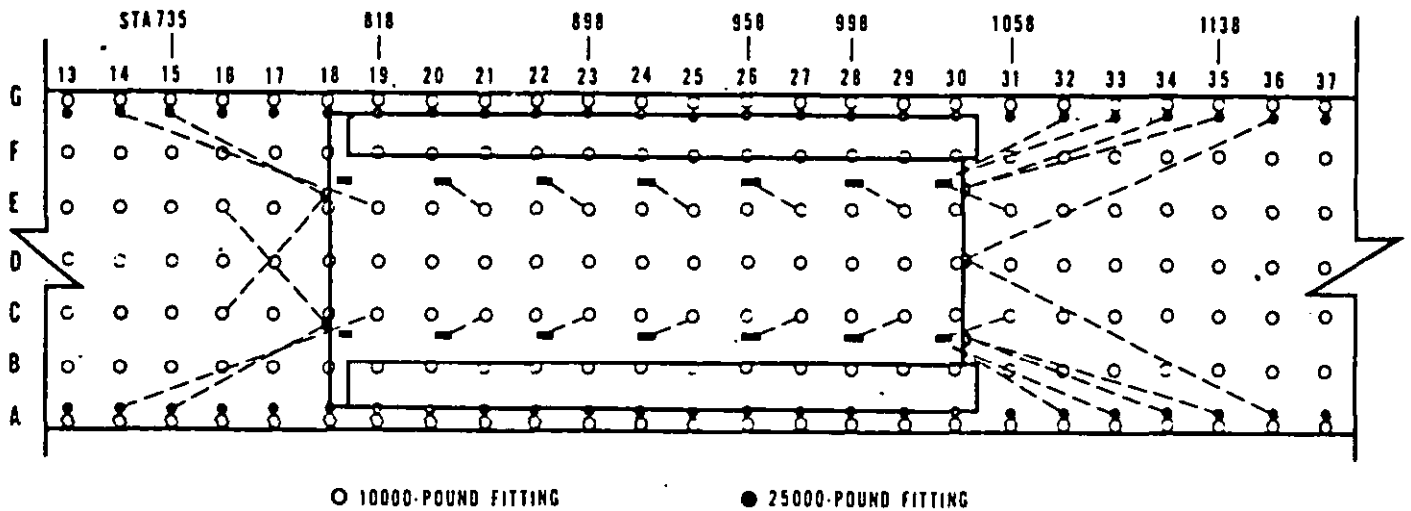

DESCRIPTION OF ITEM	ITEM FACING	LOCATION OF REFERENCE POINT		LOCATION OF CG (STA)	APPROX WT (LB)
		REFERENCE POINT	STATION		
ARMORED RECONNAISSANCE / AIRBORNE ASSAULT VEHICLE, M551	AFT	CL DRIVE SPROCKET	810.3	910	29050

Figure 8. Typical information and layout of tiedown for loading cargo in aircraft.

Table 4-2. Tiedown Data for M551 in US Air Force C-141 Airplane

Tiedown fitting		Tiedown device*		
designation	capacity in 1,000 lb	type	capacity in 1,000 lb	Attach to item
A14	25	MB-2	25	Right rear lifting provision.
G14	25	MB-2	25	Left rear lifting provision.
A15	25	MB-2	25	Right rear towing and tiedown provision.
G15	25	MB-2	25	Left rear towing and tiedown provision.
C16	10	MB-1	10	Left rear towing and tiedown provision.
E16	10	MB-1	10	Right rear towing and tiedown provision.
C21	10	MB-1	10	No. 6 right hull tiedown provision.
E21	10	MB-1	10	No. 6 left hull tiedown provision.
C23	10	MB-1	10	No. 5 right hull tiedown provision.
E23	10	MB-1	10	No. 5 left hull tiedown provision.
C25	10	MB-1	10	No. 4 right hull tiedown provision.
E25	10	MB-1	10	No. 4 left hull tiedown provision.
C27	10	MB-1	10	No. 3 right hull tiedown provision.
E27	10	MB-1	10	No. 3 left hull tiedown provision.
C29	10	MB-1	10	No. 2 right hull tiedown provision.
E29	10	MB-1	10	No. 2 left hull tiedown provision.
C31	10	MB-1	10	No. 1 right hull tiedown provision.
E31	10	MB-1	10	No. 1 left hull tiedown provision.
A32	25	MB-2	25	Around right idler wheel axle bracket.
G32	25	MB-2	25	Around left idler wheel axle bracket.
A33	25	MB-2	25	Around right idler wheel axle bracket.
G33	25	MB-2	25	Around left idler wheel axle bracket.
A34	25	MB-2	25	Right front towing and tiedown provision.
G34	25	MB-2	25	Left front towing and tiedown provision.
A35	25	MB-2	25	Right front towing and tiedown provision
G35	25	MB-2	25	Left front towing and tiedown provision.
A36	25	MB-2	25	Center front towing and tiedown provision.
G36	25	MB-2	25	Center front towing and tiedown provision.

*C-2 may be substituted for MB-1, and D-1 may be substituted for MB-2

Figure 9. Typical tiedown data table for application of restraint devices for each tiedown diagram.

TABLE OF PERCENTAGES OF VERTICAL, LONGITUDINAL, AND LATERAL RESTRAINT AT VARIOUS ANGLES

(Angles across the top are those formed between the tiedown device and the cargo floor.)
(Angles down the side are those formed between the tiedown device and the longitudinal axis of the aircraft.)

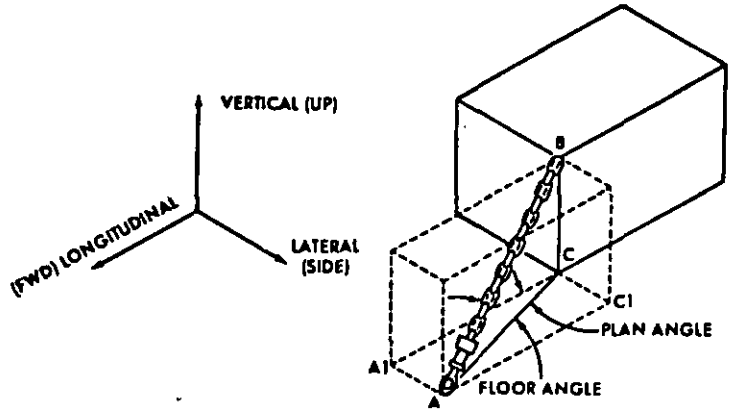

FLOOR ANGLE

PLAN ANGLE	RESTRAINT	5°	10°	15°	20°	25°	30°	35°	40°	45°	50°	55°	60°	65°	70°	75°	80°	85°
	VERTICAL*	8.7	17.4	25.9	34.2	42.3	50.0	57.4	64.3	70.7	76.6	81.9	86.6	90.6	93.9	96.6	98.5	99.6
5°	LONG.	99.2	98.1	96.2	93.6	90.2	86.3	81.6	76.3	70.4	64.0	57.2	49.8	42.1	34.1	25.8	17.3	8.7
	LAT.	8.7	8.6	8.4	8.2	7.9	7.5	7.1	6.7	6.2	5.6	4.9	4.4	3.7	2.9	2.3	1.5	0.8
10°	LONG.	98.1	97.0	95.2	92.6	89.2	85.3	80.7	75.5	69.6	63.3	56.5	49.3	41.7	33.7	25.5	17.1	8.6
	LAT.	17.3	17.1	16.8	16.6	15.8	15.1	14.3	13.3	12.3	11.2	9.9	8.7	7.4	5.9	4.5	3.0	1.5
15°	LONG.	96.2	95.2	93.3	90.8	87.5	83.7	79.1	73.9	68.3	62.1	55.4	48.3	40.9	33.0	25.0	16.8	8.4
	LAT.	25.8	25.5	25.0	24.3	23.5	22.4	21.2	19.8	18.3	16.7	14.9	12.9	10.9	8.9	6.7	4.5	2.3
20°	LONG.	93.6	92.6	90.8	88.4	85.2	81.4	76.9	72.0	66.5	60.4	53.9	47.0	39.8	32.1	24.3	16.6	8.2
	LAT.	34.1	33.7	33.0	32.1	30.9	29.6	28.0	26.2	24.2	21.9	19.6	17.1	14.5	11.7	8.9	5.9	2.9
25°	LONG.	90.2	89.2	87.5	85.2	82.1	78.5	74.2	69.4	64.1	58.3	52.0	45.3	38.3	30.9	23.5	15.8	7.9
	LAT.	42.1	41.7	40.9	39.8	38.3	36.6	34.6	32.4	29.9	27.2	24.3	21.2	17.9	14.5	10.9	7.4	3.7
30°	LONG.	86.3	85.3	83.7	81.4	78.5	**74.9	70.9	66.3	61.2	55.7	49.7	43.3	36.6	29.6	22.4	15.1	7.5
	LAT.	49.3	49.3	48.3	47.0	45.3	43.3	40.9	38.3	35.4	32.2	28.7	25.0	21.2	17.1	12.9	8.7	4.4
35°	LONG.	81.6	80.7	79.1	76.9	74.2	70.9	67.1	62.7	57.9	52.7	47.0	40.9	34.6	28.0	21.2	14.3	7.1
	LAT.	57.2	56.5	55.4	53.9	52.0	49.7	47.0	43.9	40.6	36.9	32.9	28.7	24.3	19.6	14.9	9.9	4.9
40°	LONG.	76.3	75.5	73.9	72.0	69.4	66.3	62.7	58.7	54.2	49.3	43.9	38.3	32.4	26.2	19.8	13.3	6.7
	LAT.	64.0	63.3	62.1	60.4	58.3	55.7	52.7	49.3	45.5	41.3	36.9	32.2	27.2	21.9	16.7	11.2	5.6
45°	LONG.	70.4	69.6	68.3	66.5	64.1	61.2	57.9	54.2	49.9	45.5	40.6	35.4	29.9	24.2	18.3	12.3	6.2
	LAT.	70.4	69.6	68.3	66.5	64.1	61.2	57.9	54.2	49.9	45.5	40.6	35.4	29.9	24.2	18.3	12.3	6.2
50°	LONG.	64.0	63.3	62.1	60.4	58.3	55.7	52.7	49.3	45.5	41.3	36.9	32.2	27.2	21.9	16.7	11.2	5.6
	LAT.	76.3	75.5	73.9	72.0	69.4	66.3	62.7	58.7	54.2	49.3	43.9	38.3	32.4	26.2	19.8	13.3	6.7
55°	LONG.	57.2	56.5	55.4	53.9	52.0	49.7	47.0	43.9	40.6	36.9	32.9	28.7	24.3	19.6	14.9	9.9	4.9
	LAT.	81.6	80.7	79.1	76.9	74.2	70.9	67.1	62.7	57.9	52.7	47.0	40.9	34.6	28.0	21.2	14.3	7.1
60°	LONG.	49.8	49.3	48.3	47.0	45.3	43.3	40.9	38.3	35.4	32.2	28.7	25.0	21.2	17.1	12.9	8.7	4.4
	LAT.	86.3	85.3	83.7	81.4	78.5	74.9	70.9	66.3	61.2	55.7	49.7	43.3	36.6	29.6	22.4	15.1	7.5
65°	LONG.	42.1	41.7	40.9	39.8	38.3	36.6	34.6	32.4	29.9	27.2	24.3	21.2	17.9	14.5	10.9	7.4	3.7
	LAT.	90.2	89.2	87.5	85.2	82.1	78.5	74.2	69.4	64.1	58.3	52.0	45.3	38.3	30.9	23.5	15.8	7.9
70°	LONG.	34.1	33.7	33.0	32.1	30.9	29.6	28.0	26.2	24.2	21.9	19.6	17.1	14.5	11.7	8.9	5.9	2.9
	LAT.	93.6	92.6	90.8	88.4	85.2	81.4	76.9	72.0	66.5	60.4	53.9	47.0	39.8	32.1	24.3	16.6	8.2
75°	LONG.	25.8	25.5	25.0	24.3	23.5	22.4	21.2	19.8	18.3	16.7	14.9	12.9	10.9	8.9	6.7	4.5	2.3
	LAT.	96.2	95.2	93.3	90.8	87.5	83.7	79.1	73.9	68.3	62.1	55.4	48.3	40.9	33.0	25.0	16.8	8.4
80°	LONG.	17.3	17.1	16.8	16.6	15.8	15.1	14.3	13.3	12.3	11.2	9.9	8.7	7.4	5.9	4.5	3.0	1.5
	LAT.	98.1	97.0	95.2	92.6	89.2	85.3	80.7	75.5	69.6	63.3	56.5	49.3	41.7	33.7	25.5	17.1	8.6
85°	LONG.	8.7	8.6	8.4	8.2	7.9	7.5	7.1	6.7	6.2	5.6	4.9	4.4	3.7	2.9	2.3	1.5	0.8
	LAT.	99.2	98.1	96.2	93.6	90.2	86.3	81.6	76.3	70.4	64.0	57.2	49.8	42.1	34.1	25.8	17.3	8.7

* VERTICAL RESTRAINT IS RELATED ONLY TO FLOOR ANGLE.
** THE TONED AREA INDICATES THE BEST COMPROMISE POSITION – BOTH PLAN AND FLOOR ANGLE OF 30°.

Figure 10. Table of restraint percentages.

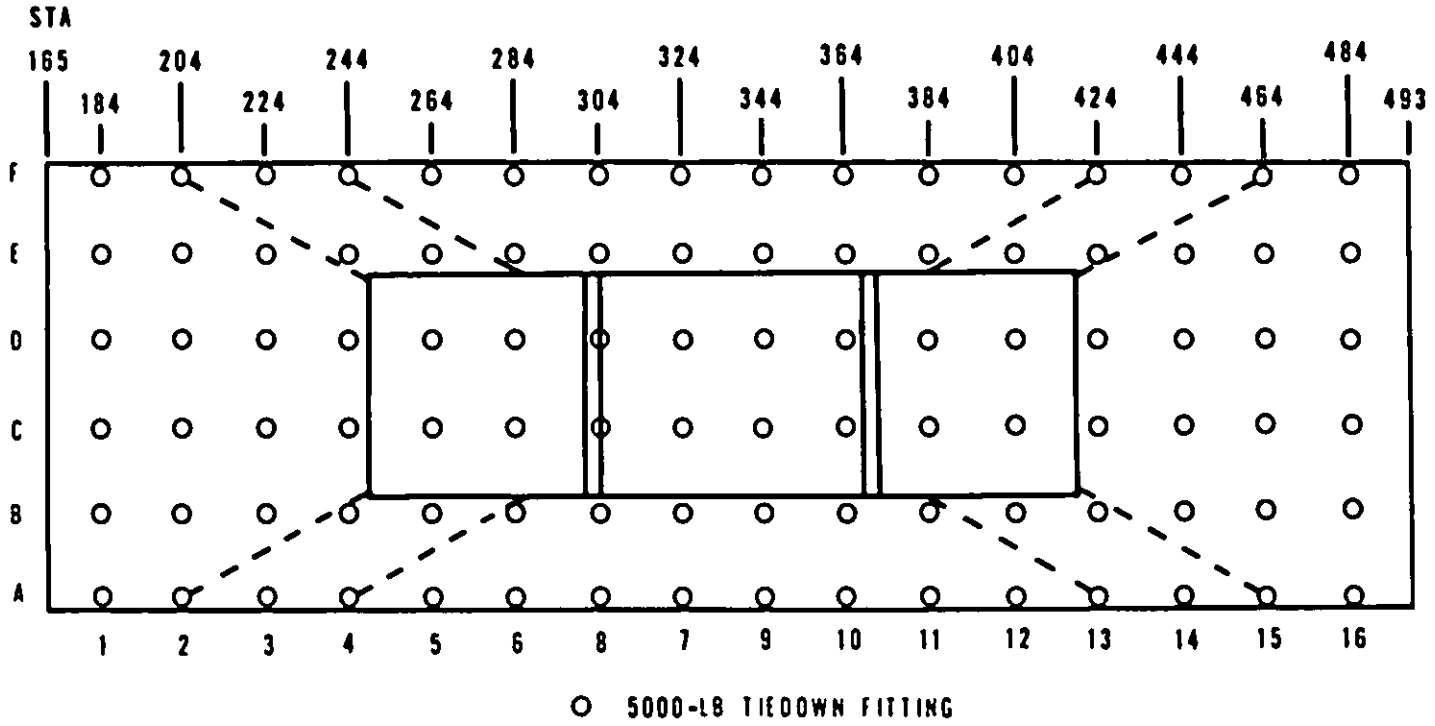

DESCRIPTION OF ITEM	ITEM FACING	LOCATION OF REFERENCE POINT		LOCATION OF CENTER OF GRAVITY (STA)	APPROX WT (LB)
		REFERENCE POINT	STATION		
PERSHING WARHEAD SECTION IN CONTAINER, M483	FORWARD	FORWARD EDGE OF CONTAINER	250	335	2877

Figure 11. Typical information and layout of tiedown diagram for loading cargo in helicopters.

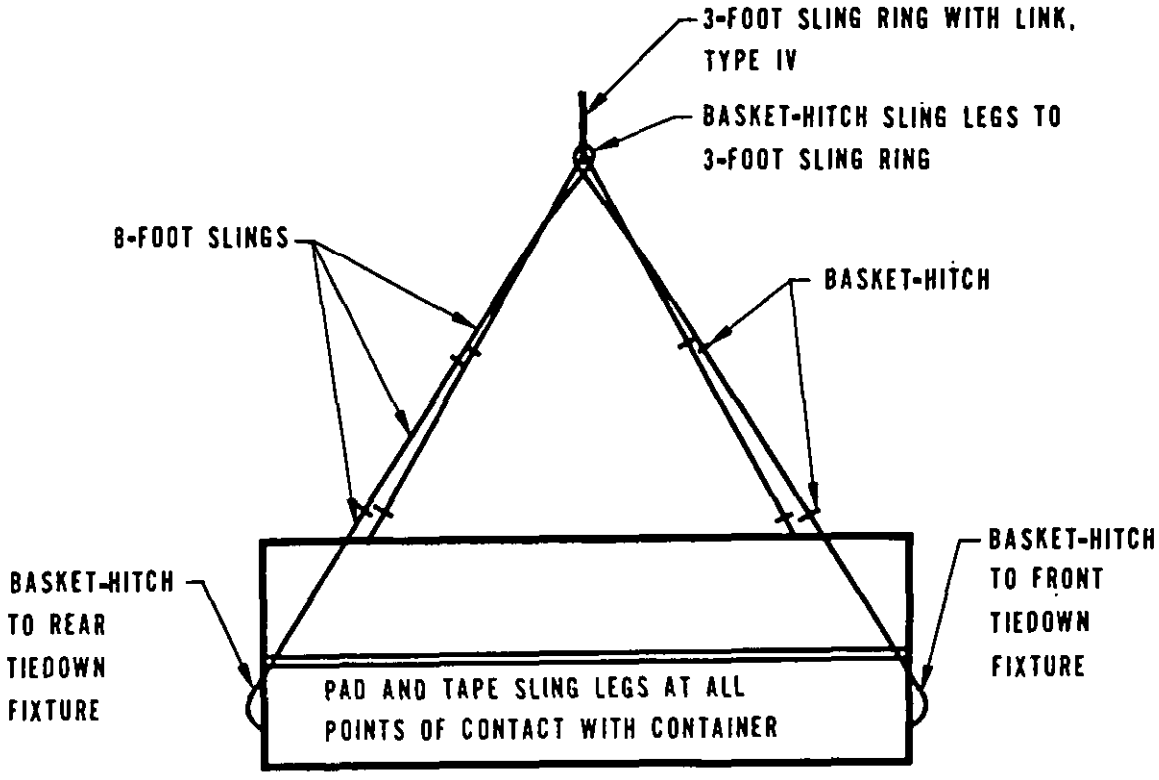

Figure 12. Typical slinging diagram showing assembly of rigging materials, arrangement, and attaching points.

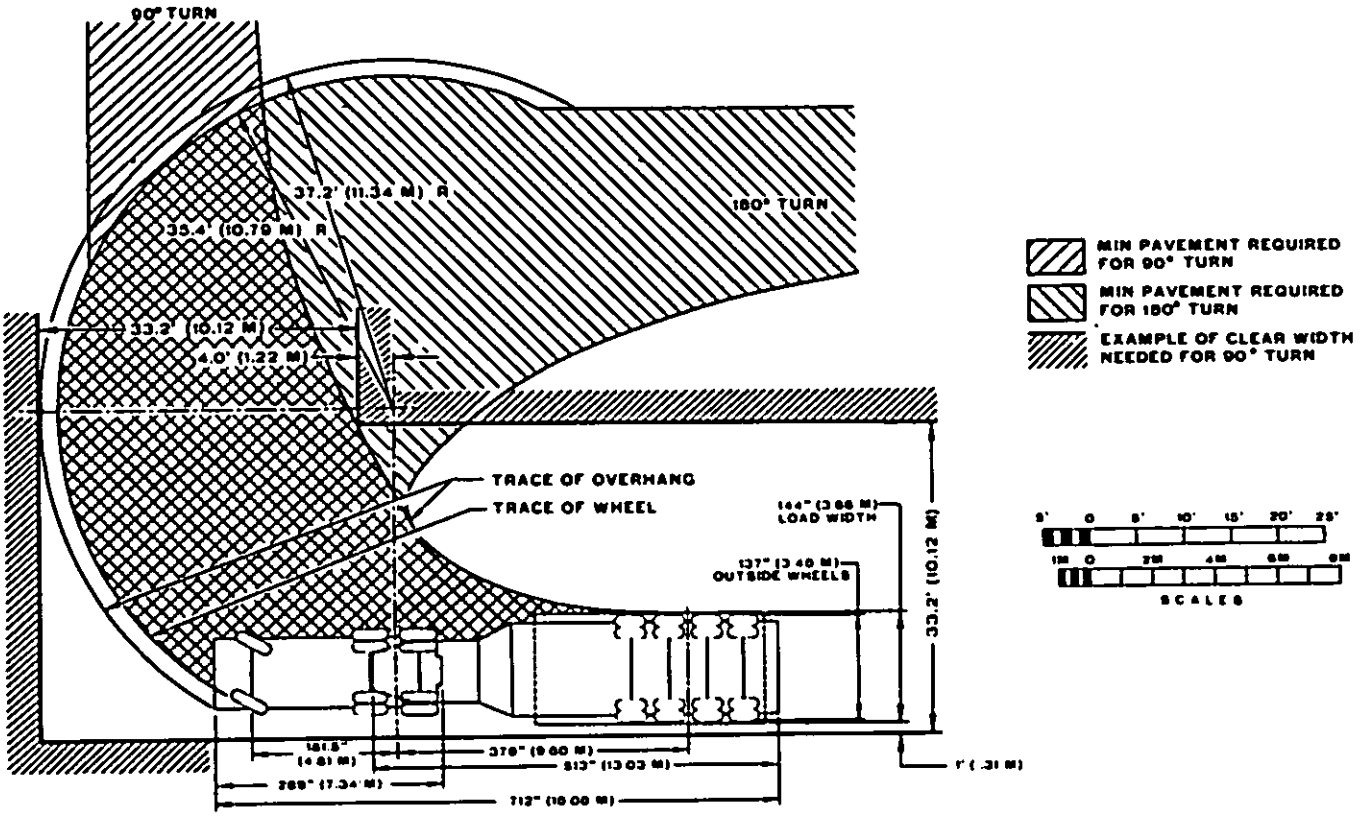

Figure 13. Typical turning radius diagram for truck-tractor and semitrailer.

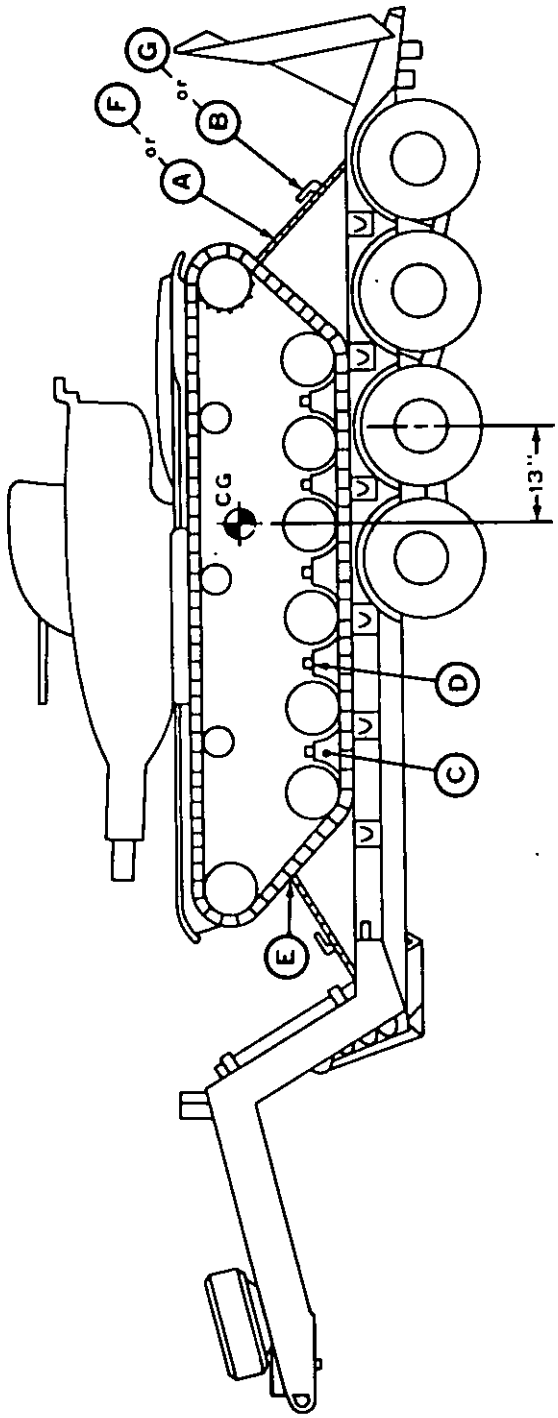

Figure 14. Typical tiedown diagram for tracked vehicle on a semitrailer.

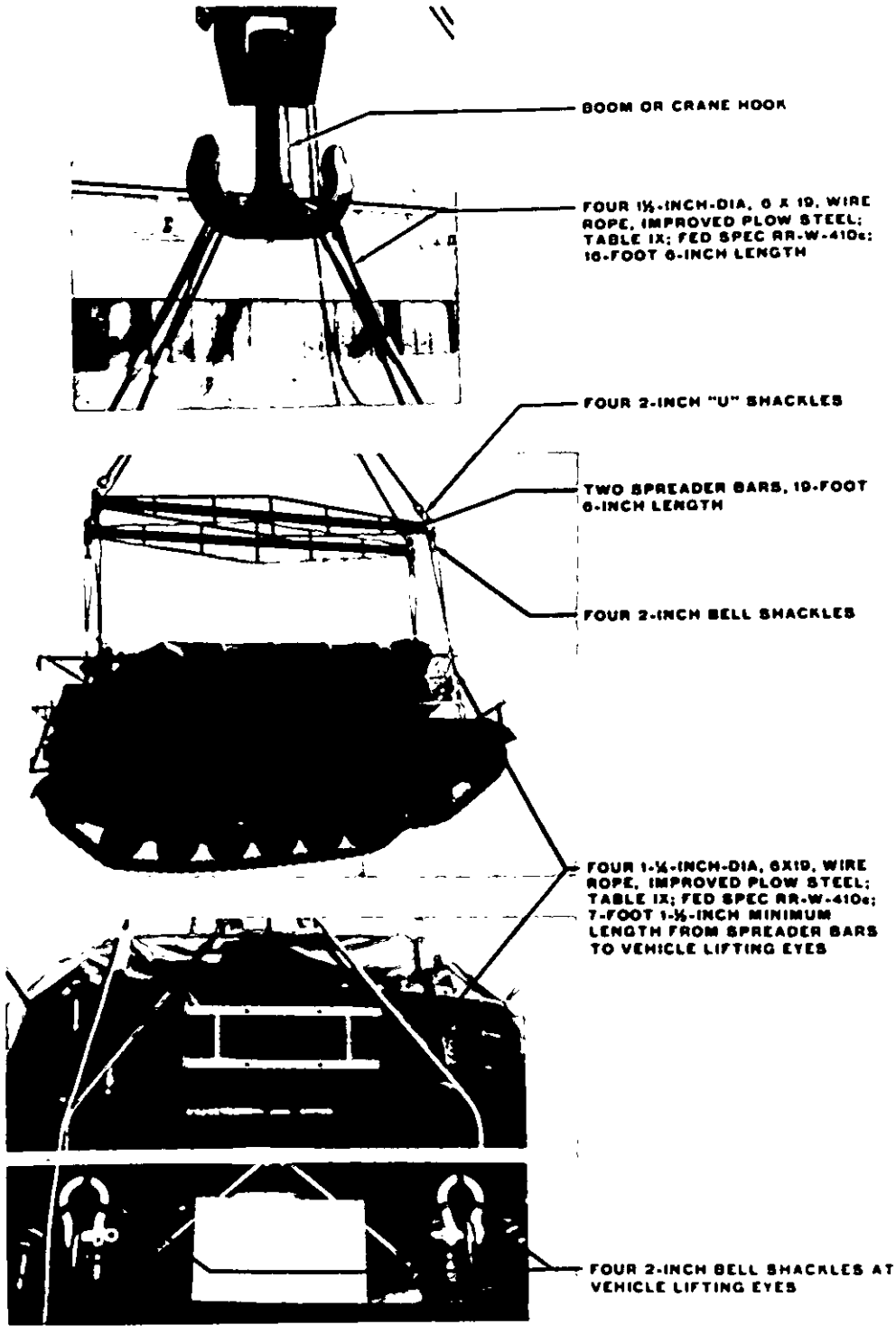

Figure 15. Typical sling diagram identifying all components and special devices.

INSTRUCTIONS: In a continuing effort to make our standardization documents better, the DoD provides this form for use in submitting comments and suggestions for improvements. All users of military standardization documents are invited to provide suggestions. This form may be detached, folded along the lines indicated, taped along the loose edge *(DO NOT STAPLE)*, and mailed. In block 5, be as specific as possible about particular problem areas such as wording which required interpretation, was too rigid, restrictive, loose, ambiguous, or was incompatible, and give proposed wording changes which would alleviate the problems. Enter in block 6 any remarks not related to a specific paragraph of the document. If block 7 is filled out, an acknowledgement will be mailed to you within 30 days to let you know that your comments were received and are being considered.

NOTE: This form may not be used to request copies of documents, nor to request waivers, deviations, or clarification of specification requirements on current contracts. Comments submitted on this form do not constitute or imply authorization to waive any portion of the referenced document*(s)* or to amend contractual requirements.

(Fold along this line)

(Fold along this line)

DEPARTMENT OF THE ARMY

NO POSTAGE NECESSARY IF MAILED IN THE UNITED STATES

OFFICIAL BUSINESS
PENALTY FOR PRIVATE USE $300

BUSINESS REPLY MAIL
FIRST CLASS PERMIT NO. 12062 WASHINGTON D. C.
POSTAGE WILL BE PAID BY THE DEPARTMENT OF THE ARMY

Director
MTMC Transportation Engineering Agency
ATTN: MTT-TRC
P. O. Box 6276
Newport News, VA 23606

(TO DETACH THIS FORM, CUT ALONG THIS LINE.)

STANDARDIZATION DOCUMENT IMPROVEMENT PROPOSAL

(See Instructions – Reverse Side)

1. DOCUMENT NUMBER	2. DOCUMENT TITLE

3a. NAME OF SUBMITTING ORGANIZATION	4. TYPE OF ORGANIZATION *(Mark one)*
b. ADDRESS *(Street, City, State, ZIP Code)*	☐ VENDOR ☐ USER ☐ MANUFACTURER ☐ OTHER *(Specify)*: _____

5. PROBLEM AREAS

a. Paragraph Number and Wording:

b. Recommended Wording:

c. Reason/Rationale for Recommendation:

6. REMARKS

7a. NAME OF SUBMITTER *(Last, First, MI)* – Optional	b. WORK TELEPHONE NUMBER *(Include Area Code)* – Optional
c. MAILING ADDRESS *(Street, City, State, ZIP Code)* – Optional	8. DATE OF SUBMISSION *(YYMMDD)*

DD FORM 82 MAR 1426

PREVIOUS EDITION IS OBSOLETE.