NOTE: The cover page of this standard has been changed for administrative reasons. There are no other changes to this document.

INCH–POUND

MIL–STD–282
28 May 1956
SUPERSEDING
MIL–F–10462A(CmlC)
30 October 1952

DEPARTMENT OF DEFENSE
TEST METHOD STANDARD

FILTER UNITS, PROTECTIVE CLOTHING, GAS–MASK COMPONENTS AND RELATED PRODUCTS: PERFORMANCE TEST METHODS

AMSC N/A

FSC 4240

DISTRIBUTION STATEMENT A. Approved for public release; distribution is unlimited.

OFFICE OF THE ASSISTANT SECRETARY OF DEFENSE

WASHINGTON 25, D. C.

Supply and Logistics 28 MAY 1956

FILTER UNITS, PROTECTIVE CLOTHING, GAS-MASK COMPONENTS AND RELATED PRODUCTS: PERFORMANCE-TEST METHODS
MIL-STD-282

1. This standard has been approved by the Department of Defense and is mandatory for use by the Departments of the Army, the Navy, and the Air Force, effective immediately.

2. In accordance with established procedure, the Standardization Division has designated the Chemical Corps and the Bureau of Ships, respectively, as Army-Navy custodians of this standard.

3. Recommended corrections, additions, or deletions should be addressed to the Standardization Division, Office of the Assistant Secretary of Defense (Supply and Logistics), Washington 25, D. C.

CONTENTS

1. SCOPE AND NUMBERING SYSTEM
2. REFERENCED DOCUMENTS
3. GENERAL PROVISIONS
4. METHODS

101.1.2 Phosgene sorption and air resistance of M8 and M10 gas filters
101.2.1 Phosgene sorption and air resistance of the M12 gas filter
102.1 DOP-smoke penetration and air resistance of M13 particulate filter, 12-c.f.m.
102.8 DOP-smoke penetration of aerosol-filter element
102.9.1 DOP-smoke penetration and air resistance of filters
105.9 Rough handling of particulate filters, absorbent units, collective protectors, and similar items
204.1.1 Mustard resistance of impermeable materials (static-diffusion method)
206.1.1 GB-vapor resistance of impermeable materials (static-diffusion method)
207.1 Liquid-vesicant resistance of impermeable materials (static-diffusion method)
502.1.1 DOP-smoke penetration of gas-mask canisters
603.1 Operation of the E1R3 water-repellency-test apparatus

FIGURES

Figure
1 Schematic diagram, penetrometer, filter testing, CG, E16
2 Schematic diagram, penetrometer, filter testing, CG, E24
3 Penetrometer, front view
4 Penetrometer, rear view
5 Penetrometer, right-front view
6 Smoke generator
7 Scattering chamber
8 Schematic diagram, penetrometer, E17
9 Schematic diagram, penetrometer, E18
10 Vibrating machine, E7
11 Static-diffusion apparatus
12 Specimen arrangement, static-diffusion test
13 Arrangement for static-diffusion test
14 Smoke-penetration meter, E27, front view
15 Smoke-penetration meter, E27, control panel
16 Smoke-penetration meter, E27, rear view
17 Smoke-penetration meter, E27, right-side view
18 Smoke-penetration meter, E27, left-side view
19 Smoke-particle-size indicator, front panel
20 Smoke-particle-size indicator, top view
21 Percent-penetration indicator, front panel
22 Percent-penetration indicator, top view
23 Mechanical analyzer, smoke-particle-size
24 Scattering chamber
25 Schematic diagram, test apparatus, water-repellency, E1R3

MILITARY STANDARD
FILTER UNITS, PROTECTIVE CLOTHING, GAS-MASK COMPONENTS AND RELATED PRODUCTS; PERFORMANCE-TEST METHODS

1. SCOPE AND NUMBERING SYSTEM

1.1 Scope. This standard covers methods used in the routine testing and inspection of filter units, protective clothing, gas mask components and related products.

1.2 Numbering system. The various test methods are designated by numbers assigned in accordance with the following systems:

1.2.1 *Decimal point significance.* Test methods are assigned consecutive numbers within the appropriate group. Group numbers are assigned as shown in 1.2.2. The numbers 1 to 99 in each group are assigned to the different types of tests. When the same type of test is used in a different group, the numbers in the 1 to 99 group remain the same. The numbers to the right of the first decimal point designate the different items or units being tested within the test group. Numbers to the right of the second decimal point designate the number of revisions.

```
:——Group
:  :Type of test
:  :  :—Item of unit tested
:  :  :  :-Revision
:  :  :  :
_  ——  _  _
0  0  0.0.  0
```

1.2.2 *Group numbers assignment.* Group numbers are assigned as follows:

Group 1—Test Methods 100 to 199 are assigned to filter units and related products' test procedures.

Group 2—Test Methods 200 to 299 are assigned to impermeable protective clothing test procedures.

Group 3—Test Methods 300 to 399 are assigned to permeable clothing test procedures.

Group 4—Test Methods 400 to 499 are assigned to gas-mask facepieces.

Group 5—Test Methods 500 to 599 are assigned to gas-mask canisters.

Group 6—Test Methods 600 to 699 are assigned to general test methods and other miscellaneous methods.

2. REFERENCED DOCUMENTS

2.1 The latest issue of the following specifications form a part of this standard:

SPECIFICATIONS

FEDERAL

O-E-760—Ethyl Alcohol (Ethanol).
UU-P-236—Paper, Filter, Analytical.

MILITARY

JAN-P-253—Paper. Liquid-Vesicant-Detector, M6.
MIL-N-11409—Nitrobensene, Reagent.
MIL-P-10455—Phosgene.

(Copies of specifications, standards, drawings, and publications required by contractors in connection with specific procurement functions should be obtained from the procuring activity or as directed by the contracting officer.)

3. GENERAL PROVISIONS

3.1 Application. This standard is issued for use as a reference in detail specifications or contracts.

3.2 Duties and responsibilities of the contractor.

3.2.1 *Responsibility.* The contractor shall be responsible for compliance with all requirements of the contract and specification whether the material is manufactured by him or a subcontractor.

3.2.2 *Manufacturing method.* The means and methods for executing the work will be determined by the contractor, but the obligation is on the contractor to satisfy the purchaser as to full compliance with the requirements of the specifications and the contract.

3.2.3 *Information furnished by the contractor.* When specified or requested by the inspector, the contractor shall inform the inspector when work will commence and of the general plans and methods that he intends to follow. During the progress of the work, the contractor shall furnish the inspector, or such of his assistants as he may designate, the following information:

a. Notification of the time when each operation which the inspector is to witness is to take place. This information shall be given sufficiently in advance to enable the inspector to be present.

b. Copies of the results of all chemical and physical tests which are directly connected with the material to be furnished.

3.2.4 *Identity.* When material is inspected by lot at the place of manufacture, the contractor shall so arrange his working, handling, and marking of the material that at all times throughout its manufacture and inspection, the inspector may identify with certainty any or all portions of each lot.

Notice. When Government drawings, specifications, or other data are used for any purpose other than in connection with a definitely related Government procurement operation, the United States Government thereby incurs no responsibility nor any obligation whatsoever; and the fact that the Government may have formulated, furnished, or in any way supplied the said drawings, specifications, or other data is not to be regarded by implication or otherwise as in any manner licensing the holder or any other person or corporation, or conveying any rights or permission to manufacture, use, or sell any patented invention that may in any way be related thereto.

Custodians:
Army—Chemical Corps
Navy—Bureau of Ships
Other interest:
Navy—S

PHOSGENE SORPTION AND AIR RESISTANCE OF M8 AND M10 GAS FILTERS

1. SCOPE

1.1 This method, which employs the E16, CG, filter testing penetrometer is for use in evaluating M8 and M10 gas filters by determining their phosgene-sorption capacities and air resistances.

2. OUTLINE OF METHOD

2.1 A mixture of air and phosgene with a phosgene concentration of approximately 10 ± 2 milligrams (mg.) per liter is passed through the gas filter (M8 or M10) at its rated flow of 150 cubic feet per minute (c.f.m.). A continuous sample of the mixture discharged from the filter is bubbled through a saturated solution of potassium iodide in acetone. When phosgene is present in the effluent mixture, it liberates free iodine from the solution, causing a color change from clear to yellow. The observed life of the filter is the time from the beginning of the test to the time of installation of a fresh potassium iodide-acetone indicator solution which will discolor within 3 minutes after exposure to a sample of the discharge of the filter. The average phosgene concentration of the phosgene-air mixture entering the sorbent filter is computed from the weight of phosgene used, the main air flow, and the time during which phosgene flowed. Provision is made for verification of the phosgene concentration by chemical analysis. The life of the filter is then corrected for a deviation of phosgene concentration from the specified 10 mg. per liter.

3. APPARATUS

3.1 The apparatus employed in the test is illustrated in figure 1. All parts designated by numbers in the text correspond to parts shown in the figure. The apparatus employed consists essentially of the following:

3.1.1 A provision for drawing air at a measured rate through the sorbent filter under test.

3.1.2 A source of phosgene and a means for introducing measured quantities of the gas into the main air stream. Cylinders with a capacity of 150 pounds shall be used.

3.1.3 A plenum, which provides a mounting position for the gas filter. The discharge of the plenum is at right angles to the inlet air flow, and the increased cross-sectional area of the plenum decreases the velocity of the phosgene-air mixture. Both design features tend to provide uniform distribution of the mixture over the face area of the gas filter being tested.

3.1.4 A mixer designed to effect a homogeneous sample of the filter effluent, and a sampling line centered in the discharge pipe from the mixer. This sampling provides a means for determining the "break point," or point at which the gas filter ceases to prevent effectively the passage of phosgene.

3.1.5 A sampling line centered in the plenum for obtaining samples of the phosgene-air mixture entering the gas filter. These samples are used to verify the phosgene concentration by chemical analysis.

4. REAGENTS AND MATERIALS

4.1 **Phosgene.** Use phosgene conforming to Specifications MIL–P–10455, grade B.

4.2 **Reagents.** Unless otherwise specified, only ACS reagent grade chemicals and dis-

tilled water shall be used throughout the tests. Blank determinations shall be run in parallel with the tests and corrections applied when significant.

4.2.1 *Potassium iodide-acetone indicator.* Prepare a fresh saturated solution of potassium iodide in redistilled acetone on the day the test is made. Dry the acetone before distillation with anhydrous copper sulfate. Discard the final solution if it possesses any yellow color.

4.2.2 *Color standard, gold chloride solution.* Dissolve 0.030 gram (gm.) of gold chloride ($AuCl_3.HCl.3H_2O$) in 100 milliliters (ml.) of water. Pour 20 ml. of this solution into a test tube or ampoule of approximately the same diameter as the bubblers used in the test and seal the tube or ampoule. This solution is the color standard for the potassium iodide-acetone indicator "breakpoint" and should be used for comparison throughout the test.

4.2.3 *Sodium hydroxide solution (alcohol-water).* Dissolve 40 gm. of sodium hydroxide in 500 ml. of water and add 500 ml. of 95 percent ethyl alcohol conforming to Specification O–E–760, grade I, class B.

4.2.4 *Standard silver nitrate solution, 0.025N.* Dissolve 76.5 gm. of silver nitrate in 18 liters of water and store the solution in opaque bottles. To standardize, dissolve 1.0 gm., weighed to the nearest mg., of potassium (or sodium) chloride in exactly 1 liter of water. Dry the potassium chloride at 150° ± 5°C. for at least 2 hours before preparing the solution. The water used in making up the solution must be free of chloride. Standardize the silver nitrate solution against the potassium chloride solution by the Volhard method, using duplicate 50-ml. samples. Calculate the normality of the silver nitrate solution as shown in 7.1.

4.2.5 *Standard potassium thiocyanate solution, 0.025N.* Dissolve 43.9 gm. of potassium thiocyanate in 18 liters of water and standardize against the previously standardized 0.025*N* silver nitrate.

4.2.6 *Nitrobenzene.* Reagent grade nitrobenzene conforming to Specification MIL–N–11409 shall be used. The nitrobenzene shall be redistilled if not free of chlorides.

4.2.7 *Ferric ammonium sulfate solution, saturated.* Prepare a saturated solution of ferric ammonium sulfate (ferric alum) with water.

4.2.8 *Nitric acid, 50 percent by volume.* Dilute concentrated nitric acid 1 to 1 by volume with water. Boil the nitric acid before dilution if has a yellow coloration.

5. PROCEDURE

5.1 Connect compressed air line to a 90-pound per square inch (p.s.i.) compressed air source with switch (15) in the OFF position. Drain water from the line by means of the drain valve under water trap (17). Adjust oil flow from lubricator (16) so that a very small flow is observed by means of the sight glass when the air clamp is opened and closed several times. (A flow of about 3 drops per hour is recommended by the manufacturer.) Fill the lubricator with light oil when the level drops appreciably.

5.2 Make certain that the valve on the top of phosgene cylinder (24) is closed. Open valve (22). Break the union between valve (22) and the phosgene cylinder valve and weigh the cylinder on platform scale (25). The cylinder shall be weighed immediately before each test. Reconnect the union and close valve (22).

5.3 Visually check the gaskets on the plenum (10) and the carriage (26). With switch (15) in the OFF position, slide gas filter (12) between plenum and carriage. Center gas filter by means of filter stop lever (11). Clamp gas filter in place by moving air-clamp switch (15) to the ON position.

5.4 Connect the side outlet of the qualitative bubbler (7), containing 15 ml. of saturated potassium iodide-acetone solution, to the needle valve (8) connecting with the vacuum.

Connect the top inlet of the bubbler to the sampling line containing the rotameter (9) which is centered in the effluent air stream.

5.5 Turn on the blower at switch (18) and adjust air flow with valve (21) to the differential on draft gage (20) corresponding to a flow of 150 c.f.m. Record the resistance indicated by manometer (5) of the gas filter (12) at this flow. Open valve (8) slightly to vacuum and then open shutoff valve (6). Adjust the effluent sampling flow with valve (8) to a float height on rotameter (9) corresponding to a flow of 1500 ml. per minute.

5.6 With valve (22) closed, slowly open the phosgene cylinder valve. Pass the open end of a small beaker containing about 15 ml. of concentrated ammonium hydroxide slowly along the phosgene line from the cylinder to valve (22). The appearance of white fumes indicates phosgene leakage. If there is evidence of leakage, shut off valve of cylinder (24), locate and eliminate the source of leakage, and reopen phosgene cylinder valve. After making certain that all leaks have been eliminated, slowly open valve (22) until the float height in rotameter (23) corresponds to a flow of 10.4 liters per minute. Start timing device.

5.7 Maintain the specified main flow and sampling flow rates throughout the test. Replenish the potassium iodide-acetone solution, when necessary, to maintain the 15-ml. level. When the bubbler solution turns to a yellow color equal to that of the color standard (see 4.2.2) immediately substitute a bubbler containing fresh indicator solution. Continue to replace bubblers until a fresh indicator solution goes through the color change within 3 minutes after installation. At this point a true "break" will have occurred. Record, to the nearest whole minute, the observed life of the filter which is the time elapsed from the setting of the timer until the installation of the final bubbler. (See 7.3.1)

5.8 When a concentration sample is required, fill each of four quantitative bubblers with 25 ml. of alcoholic sodium hydroxide solution. After the test has begun, install two bubblers (2) in series as shown in figure 1, connections being made between the bubbler inlet and sampling line near shutoff valve (1) and between the bubbler outlet and rotameter (4) with rubber tubing. With valve (1) closed, open needle valve (3). If the float in rotameter (4) does not rise, the system does not leak. If there is leakage, locate the source and eliminate it. When all leaks are eliminated, open valve (3) slightly and open valve (1). Adjust valve (3) so that the float of rotameter (4) has a height corresponding to a flow of 500 ml. per minute. Purge sample line for 2 minutes and turn off valve (1) and valve (3) respectively. Replace the two bubblers with two containing fresh solution. Open valve (3) and check for leaks. Open valve (1) and readjust flow to 500 ml. per minute. Take a 4-minute sample (2 liters). Turn off valve (1) and valve (3) respectively. Remove the bubblers for chemical analysis. (See 6.2.1.)

5.9 Upon completion of run, close phosgene cylinder valve and record the total time (T), to the nearest minute that the phosgene was flowing. (See 7.2.1.) Open valve (22) and record final resistance of the gas filter. Do not remove the filter until pure air has been passed through it for at least 10 minutes.

5.10 While filter is being purged with pure air (phosgene cylinder valve closed and valve (22) open), crack union between phosgene cylinder and rotameter (23). Allow phosgene flow line to purge at least 2 minutes. Disconnect phosgene cylinder and reweigh. Determine average phosgene concentration. (See 7.2.1.)

5.11 Reconnect the phosgene flow line at the union and close valve (22). Calculate the life of the filter as shown in 7.3.1.

6. DETERMINATION OF PHOSGENE CONCENTRATION BY CHEMICAL ANALYSIS

6.1 Normally the phosgene concentration as determined by weight and the rate of air

flow is sufficiently accurate for test purposes. However, verification of the phosgene concentration shall be made by chemical analysis when any of the following apply:

(a) a new test apparatus is put into operation.
(b) the life of a gas filter does not conform to the specified life of at least 30 minutes.
(c) an exceptionally long life is recorded (1 hour or more).
(d) the test apparatus is put into operation after a period of idleness.
(e) at any time when measurements or results are questionable.

6.2 Analysis. The alcoholic sodium hydroxide solution is analyzed volumetrically for chlorides using the following method, taking advantage of the fact that filtering the silver chloride is unnecessary upon addition of sufficient nitrobenzene (at least 1 ml. nitrobenzene per 50 mg. chloride).

6.2.1 *Procedure.* Combine the alcoholic sodium hydroxide solutions from the two bubblers (2) in a 500-ml. ground-glass stoppered Erlenmeyer flask. Carefully wash the bubbler assembly with water and add the washings to the solution in the flask. Acidfy with 50 percent nitric acid using phenolphthalein as an indicator. Add approximately 5 ml. excess acid. Add 20 ml. (an excess) of standard 0.025*N* silver nitrate solution and shake the flask. Add 2 to 3 ml. of nitrobenzene, stopper the flask and shake vigorously for at least 1 minute to coagulate the silver chloride precipitate. Add 5 ml. of saturated ferric ammonium sulfate solution as an indicator and back titrate with standard 0.025*N* potassium thiocyanate solution until the first permanent red-brown color is developed. Run a chloride blank on 50 ml. of the alcohol-water solution of sodium hydroxide. Calculate the phosgene concentration as shown in 7.4.1.

7. CALCULATIONS

7.1 Standardization of the 0.025N silver nitrate solution. (See 4.2.4.)

7.1.1 *Normality calculation.* Calculate the normality of the silver nitrate solution as follows:

$$N = \frac{K \times G}{M}$$

where:

N = normality of silver nitrate solution.
K = 0.671 for potassium chloride or 0.855 for sodium chloride.
G = weight of potassium (or sodium) chloride in grams.
M = total milliliters of silver nitrate solution minus milliliters of silver nitrate solution equivalent to the potassium thiocyanate solution used.

7.2 Phosgene concentration by weight.

7.2.1 *Calculation.* Using the following formula, calculate the average phosgene concentration:

$$C_a = \frac{W \times 453.6 \times 1000}{T \times 150 \times 28.3}$$

where:

C_a = average phosgene concentration in milligrams per liter.
W = weight in pounds of phosgene used, obtained by subtracting the final weight of the phosgene cylinder, (see 5.10) from the initial cylinder weight (see 5.2).
T = time in minutes of phosgene flow during which W pounds of phosgene was used (see 5.9).

7.3 Corrected filter life.

7.3.1 Calculate the corrected life of the filter as follows:

$$L = \frac{C_a \times L_o}{C_s}$$

where:

L = corrected life of filter in minutes.
L_o = observed life of filter in minutes (see 5.7).
C_a = average phosgene concentration in milligrams per liter.
C_s = specified phosgene concentration (10 mg. per liter).

7.4 Phosgene concentration by chemical analysis.

7.4.1 Calculate the average phosgene concentration as follows:

$$C_a = \frac{(A—B—C) \times N \times 99}{4}$$

where:

C_a = Average phosgene concentration in milligrams per liter of mixture entering the gas filter.

A = total volume in milliliters of silver nitrate used.

B = volume in milliliters of unreacted silver nitrate (milliliters potassium thiocyanate corrected to the equivalent milliliters of silver nitrate).

C = volume in milliliters of silver nitrate obtained in the blank determination.

N = normality of the standard silver nitrate solution.

8. NOTES

8.1 Calibration of apparatus.

8.1.1 *Calibration of phosgene rotameter.* Calibrate the phosgene rotameter (23) over a range of 10 to 50 liters per minute air flow employing a dry meter of known accuracy. Plot a calibration curve showing air flow in liters per minute versus height of the float. Calculate phosgene flows at various heights of the float using the air flows versus height of the float and the following formula:

$$Q_{cg} = Q_{air} \sqrt{\frac{M.W._{air}}{M.W._{cg}}} = Q_{air} \times 0.54$$

where:

Q_{cg} = flow of phosgene (liters per minute).

Q_{air} = flow of air determined from the calibration curve (liters per minute).

$M.W._{cg}$ = molecular weight of phosgene

$M.W._{air}$ = molecular weight of air

Using the data thus obtained, plot a curve showing phosgene flows versus float heights of the rotameter. Use the same axes for this second curve as were used for the air-flow versus float-height calibration curve. Indicate on the phosgene-flow versus float-height curve the height corresponding to a flow of 10.4 liters per minute, the phosgene flow required for the test.

8.1.2 *Calibration of the main flow orifice meter.* Calibrate the main flow orifice meter (19) against a standard orifice meter or with the aid of a pitot tube. Record the corresponding flows and pressure drops across the main flow orifice meter. Plot a calibration curve showing air flow versus pressure drop across the main flow orifice meter. Note the pressure drop corresponding to 150 c.f.m.

8.1.3 *Calibration of rotameter (effluent-air-sampling flow).* Connect the side outlet of qualitative bubbler (7) containing 15 ml. of potassium iodide-acetone solution to rotameter (9). Connect the top inlet of the bubbler to the outlet of a commercial gas meter (capacity approximately 10 liters per minute) of known accuracy. Leaving the inlet of the gas meter open to the atmosphere, vary the flow through the sampling line with needle valve (8). Record the float heights at various corresponding air-flow adjustments (milliliters per minute). Plot air flows versus float heights. Mark the rotameter glass at the level corresponding to a flow of 1500 ml. (1.5 liters) per minute.

8.1.4 *Calibration of rotameter (concentration sampling flow).* Break the concentration flow line between the quantitative bubblers and valve (1). Connect the quantitative bubblers to the outlet of a dry gas meter (10 liters per minute capacity), leaving the inlet of the gas meter open to the atmosphere. Record corresponding float heights and air flows (milliliters per minute). Plot air flows versus float heights. Mark the rotameter glass at the level corresponding to a flow of 500 ml. (0.50 ± 0.03 liter) per minute.

8.2 **Safety precautions.** All persons in the vicinity of the test should be equipped with service gas masks and be familiar with their use. Personnel should mask immediately when the odor of phosgene (similar to that of musty hay) is detected.

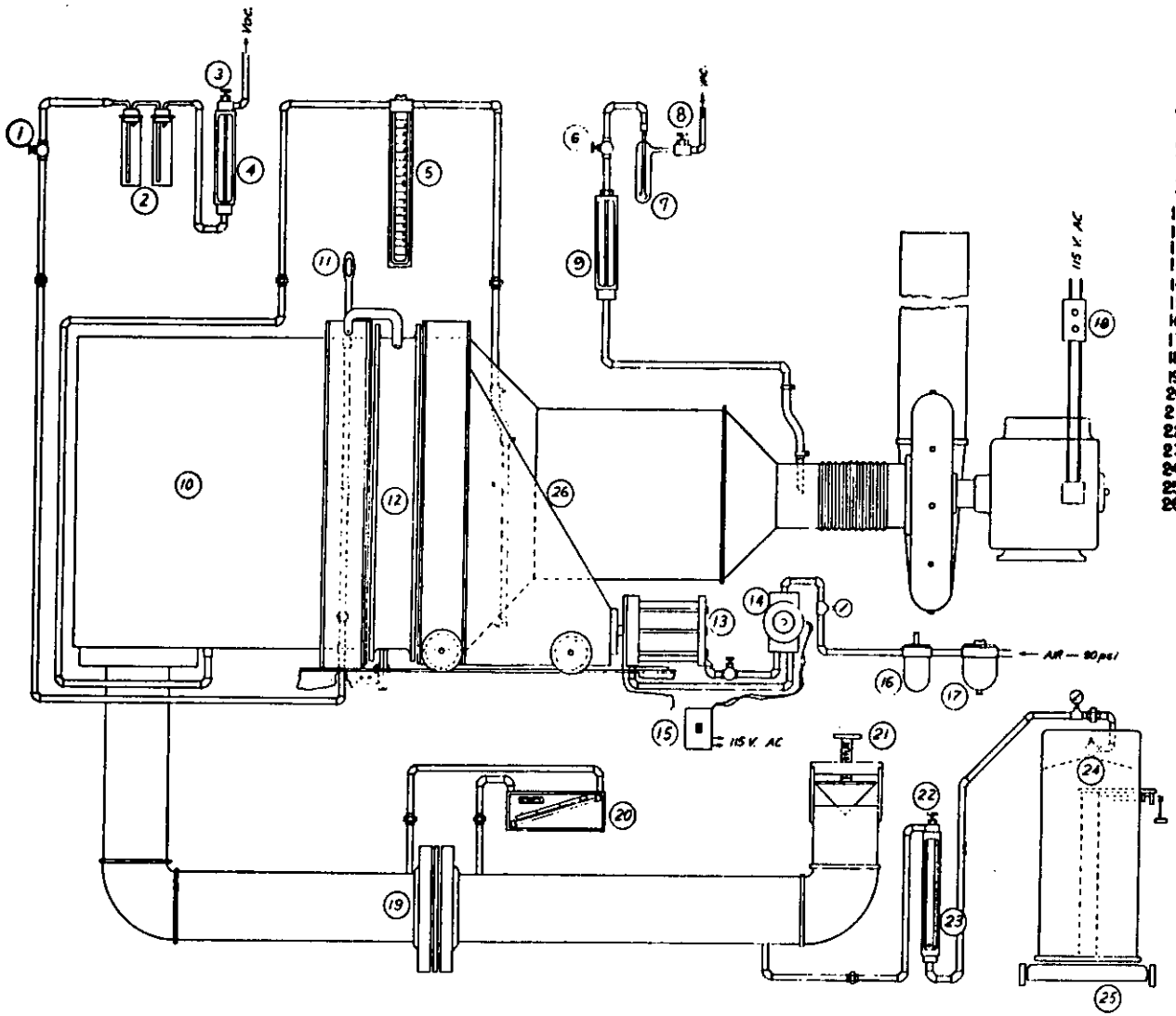

1. Shut-off valve, concentration sampling flow.
2. Quantitative bubblers, concentration sampling flow.
3. Needle valve, concentration sampling flow.
4. Rotameter, concentration sampling flow.
5. Air resistance manometer.
6. Shut-off valve, effluent sampling flow.
7. Qualitative bubbler, effluent sampling flow.
8. Needle valve, effluent sampling flow.
9. Rotameter, effluent sampling flow.
10. Plenum.
11. Filter stop lever.
12. Filter, gas, M8 or M10.
13. Air cylinder, air clamp.
14. Solenoid valve, air clamp.
15. Switch, air clamp.
16. Lubricator, compressed air line.
17. Water trap, compressed air line.
18. Switch, motor blower.
19. Orifice meter, main air flow.
20. Draft gage, main air flow.
21. Air intake valve.
22. Needle valve, phosgene flow.
23. Rotameter, phosgene flow.
24. Phosgene cylinder.
25. Platform scale.
26. Carriage and mixer.

Figure 1. Schematic diagram, penetrometer, filter testing, GG, E16.

PHOSGENE SORPTION AND AIR RESISTANCE OF THE M12 GAS FILTER

1. SCOPE

1.1 This method, which employs the E24, CG, filter testing penetrometer, is for use in evaluating the M12 gas filter by determining its phosgene sorption capacity and air resistance.

2. OUTLINE OF METHOD

2.1 A mixture of air and phosgene with a phosgene concentration of approximately 10 ± 1 mg. per liter is passed through the M12 gas filter at its rated flow of 12 ± 0.5 c.f.m. A continuous sample of the mixture discharged from the filter is bubbled through a saturated solution of potassium iodide in acetone. When phosgene is present in the effluent mixture, it liberates free iodide from the solution, causing a color change from clear to yellow. The observed life of the filter is the time from the beginning of the test to the time of installation of fresh potassium iodide-acetone indicator solution which will discolor within 3 minutes after exposure to a sample of the discharge of the filter. The average phosgene concentration of the phosgene-air mixture entering the sorbent filter is computed by chemical analysis. The life of the filter is then corrected for a deviation of phosgene concentration from the specified 10 mg. per liter.

3. APPARATUS

3.1 The apparatus employed in the test is illustrated in figure 2. All parts designated by numbers in the text correspond to parts shown in the figure. The apparatus consists essentially of the following:

3.1.1 A provision for drawing air at a measured rate through the sorbent filter under test.

3.1.2 A source of phosgene and a means for introducing measured quantities of the gas into the main air stream. Cylinders with a capacity of 150 pounds shall be used.

3.1.3 A plenum, which provides a mounting position for the gas filter. The discharge of the plenum is at right angles to the inlet air flow, and the increased cross-sectional area of the plenum decreases the velocity of the phosgene-air mixture. Both design features tend to provide uniform distribution of the mixture over the face area of the gas filter being tested.

3.1.4 A mixer designed to effect a homogeneous sample of the filter effluent, and a sampling line centered in the discharge pipe from the mixer. This sampling provides a means for determining the "break point", or point at which the gas filter ceases to prevent effectively the passage of phosgene.

3.1.5 A sampling line centered in the plenum for obtaining samples of the phosgene-air mixture entering the gas filter. These samples are used to determine the phosgene concentration by chemical analysis.

4. REAGENTS AND MATERIALS

4.1 Phosgene. Use phosgene conforming to Specifications MIL-P-10455, grade B.

4.2 Reagents. Unless otherwise specified, only ACS reagent grade chemicals and distilled water shall be used throughout the tests. Blank determinations shall be run in parallel with the tests and corrections applied when significant.

4.2.1 *Potassium iodide-acetone indicator.* Prepare a fresh saturated solution of potassium iodide in redistilled acetone on the day the test is made. Dry the acetone before distillation with anhydrous copper sulfate. Discard the final solution if it possesses any yellow color.

4.2.2 *Color standard, gold chloride solution.* Dissolve 0.030 gm. of gold chloride ($AuCl_3.HCl.3H_2O$) in 100 ml. of water. Pour 20 ml. of this solution into a test tube or ampoule of approximately the same diameter as the bubblers used in the test and seal the tube or ampoule. This solution is the color standard for the potassium iodide-acetone indicator "break-point" and should be used for comparison throughout the test.

4.2.3 *Sodium hydroxide solution (alcohol-water).* Dissolve 40 gm. of sodium hydroxide in 500 ml. of water and add 500 ml. of 95 percent ethyl alcohol conforming to Specification O-E-760, grade I, class B.

4.2.4 *Standard silver nitrate solution, 0.025N.* Dissolve 76.5 gm. of silver nitrate in 18 liters of water and store the solution in opaque bottles. To standardize, dissolve 1.0 gm., weighed to the nearest milligram, of potassium (or sodium) chloride in exactly 1 liter of water. Dry the potassium chloride at 150 ± 5°C. for at least 2 hours before preparing the solution. The water used in making up the solution must be free of chloride. Standardize the silver nitrate solution against the potassium chloride solution by the Volhard method, using duplicate 50 ml. samples. Calculate the normality of the silver nitrate solution as shown in 7.1.

4.2.5 *Standard potassium thiocyanate solution, 0.025N.* Dissolve 43.9 gm. of potassium thiocyanate in 18 liters of water and standardize against the previously standardized 0.025*N* silver nitrate.

4.2.6 *Nitrobenzene.* Reagent grade nitrobenzene conforming to Specification MIL-N-11409 shall be used. The nitrobenzene shall be redistilled if not free of chlorides.

4.2.7 *Ferric ammonium sulfate solution, saturated.* Prepare a saturated solution of ferric ammonium sulfate (ferric alum) with water.

4.2.8 *Nitric acid, 50 percent by volume.* Dilute concentrated nitric acid 1 to 1 by volume with water. Boil the nitric acid before dilution if it has a yellow coloration.

5. PROCEDURE

5.1 Connect compressed air line to a 90 p.s.i. compressed air source with switch (25) in the OFF position. Drain water from the line by means of the drain valve under water trap (18). Adjust oil flow from lubricator (24) so that a very small flow is observed by means of the sight glass when the air clamp is opened and closed several times. (A flow of about 3 drops per hour is recommended by the manufacturer.) Fill the lubricator with light oil when the level drops appreciably.

5.2 Visually check the gaskets on the plenum (21) and the carriage (19). With switch (17) in the OFF position, slide gas filter (20) between plenum and carriage. Center gas filter, and clamp in place by moving air clamp switch (17) to the ON position.

5.3 Connect the side outlet of the qualitative bubbler (14), containing 15 ml. of saturated potassium iodide-acetone solution, to the needle valve (12) connecting with the vacuum line. Connect the top inlet of the bubbler to the rotameter in the sampling line which is centered in the effluent air stream.

5.4 Turn on the blower at switch (25) and adjust air flow with valve (23) to the differential on draft gage (5) corresponding to

a flow of 12 c.f.m. Record the resistance indicated by manometer (11) of the gas filter (20) at this flow. Open valve (12) slowly to vacuum and adjust the effluent sampling flow to a float height on rotameter (13) corresponding to a flow of 1500 ml. per minute.

5.5 With valve (3) closed, slowly open the phosgene cylinder valve (2). Pass the open end of a small beaker containing about 15 ml. of concentrated ammonium hydroxide slowly along the phosgene line from the cylinder to valve (3). The appearance of white fumes indicates phosgene leakage. If there is evidence of leakage, shut off valve (2), locate and eliminate the source of leakage, and reopen valve (2). After making certain that all leaks have been eliminated, slowly open valve (3) until the float height in rotameter (4) corresponds to a flow of 840 ml. per minute. Start timing device.

5.6 Maintain the specified main flow and sampling flow rates throughout the test. Replenish the potassium iodide-acetone solution, when necessary, to maintain the 15-ml. level. When the bubbler solution turns to a yellow color equal to that of the color standard (see 4.2.2), immediately substitute a bubbler containing fresh indicator solution. Continue to replace bubblers until a fresh indicator solution goes through the color change within 3 minutes after installation. At this point a true "break" will have occurred. Record, to the nearest whole minute, the observed life of the filter which is the time elapsed from the setting of the timer until the installation of the final bubbler. (See 7.3.1.)

5.7 Fill each of four quantitative bubblers with 25 ml. of alcoholic sodium hydroxide solution. After the test has begun, install two bubblers (7) in series as shown in figure 1, connections being made between the bubbler inlet and sampling line near shutoff valve (22) and between the bubbler outlet and rotameter (10) with rubber tubing. With valve (22) closed, open needle valve (9). If the float in rotameter (10) does not rise, the system does not leak. If there is leakage, locate the source and eliminate it. When all leaks are eliminated, open valve (9) slightly and open valve (22). Adjust valve (9) so that the float of rotameter (10) has a height corresponding to a flow of 500 ml. per minute. Purge sample line for 2 minutes and turn off valve (22) and valve (9) respectively. Replace the two bubblers with two containing fresh solution. Open valve (9) and check for leaks. Open valve (22) and readjust flow to 500 ml. per minute. Take a 4-minute sample (2 liters). Turn off vavle (22) and valve (9) respectively. Remove the bubblers for chemical analysis. (See 6.1.1.)

5.8 Upon completion of run, close valve (2), open valve (3), and record the final resistance of the gas filter. Do not remove the filter until pure air has passed through it for at least 10 minutes. Determine the average phosgene concentration. (See 7.2.1) Calculate the life of the filter as shown in 7.3.1.

6. DETERMINATTION OF PHOSGENE CONCENTRATION BY CHEMICAL ANALYSIS

6.1 Analysis. The alcoholic sodium hydroxide solution is analyzed volumetrically for chlorides using the following method, taking advantage of the fact that filtering the silver chloride is unnecessary upon the addition of sufficient nitrobenzene (at least 1 ml. nitrobenzene per 50 mg. chloride).

6.1.1 *Procedure.* Combine the alcoholic sodium hydroxide solutions from the two bubblers (2) in a 500-ml. ground-glass stoppered Erlenmeyer flask. Carefully wash the bubbler assembly with distilled water and add the washings to the solution in the flask. Acidify with 50 percent nitric acid using phenolphthalein as an indicator. Add approximately 5 ml. excess acid. Add 20 ml. (an excess) of standard 0.025*N* silver nitrate solution and shake the flask. Add 2 to 3 ml. of nitrobenzene, stopper the flask and shake

vigorously for at least 1 minute to coagulate the silver chloride precipitate. Add 5 ml. of saturated ferric ammonium sulfate solution as an indicator and back titrate with standard 0.025*N* potassium thiocyanate solution until the first permanent red-brown color is developed. Run a chloride blank on 50 ml. of the solution of sodium hydroxide. Calculate the average phosgene concentration as shown in 7.2.1.

7. CALCULATIONS

7.1 Standardization of the 0.025*N* silver nitrate solution. See 4.2.4.

7.1.1 *Normality calculation.* Calculate the normality of the silver nitrate solution as follows:

$$N = \frac{K \times G}{M}$$

where:

N = normality of silver nitrate solution.
K = 0.671 for potassium chloride or 0.855 for sodium chloride.
G = weight of potassium (or sodium) chloride in grams.
M = total milliliters of silver nitrate solution minus milliliters of silver nitrate equivalent to the potassium thiocyanate solution used.

7.2 Phosgene concentration by chemical analysis.

7.2.1 *Concentration calculation.* Calculate the average phosgene concentration as follows:

$$C_a = \frac{(A - B - C) \times 99 \times N}{4}$$

where:

C_a = average phosgene concentration in milligram per liter of mixture entering the gas filter.
A = total volume in milliliters of silver nitrate used.
B = volume in milliliters of unreacted silver nitrate (ml. potassium thiocyanate corrected to the equivalent ml. of silver nitrate).
C = volume in milliliters of silver nitrate obtained in the blank determination.
N = normality of the standard silver nitrate solution.

7.3 Corrected filter life.

7.3.1 Calculate the corrected life of the filter as follows:

$$L = \frac{C_a \times L_o}{C_s}$$

where:

L = corrected life of filter in minutes.
L_o = observed life of filter in minutes (see 5.6).
C_a = average phosgene concentration in milligrams per liter.
C_s = specified phosgene concentration (10 mg. per liter).

8. NOTES

8.1 Calibration of apparatus.

8.1.1 *Calibration of phosgene rotameter.* Calibrate the phosgene rotameter (4) over a range of 500 to 1700 ml. per minute air flow employing a dry meter of known accuracy. Plot a calibration curve showing air flow in liters per minute versus height of the float. Calculate phosgene flows at various heights of the float using the air flow versus height of the float and the following formula:

$$Q_{cg} = Q_{air} \sqrt{\frac{M.W._{air}}{M.W._{cg}}} = Q_{air} \times 0.54$$

where:

Q_{cg} = flow of phosgene (liters per minute).
Q_{air} = flow of air determined from the calibration curve (liters per minute).
$M.W._{cg}$ = molecular weight of phosgene.
$M.W._{air}$ = molecular weight of air.

Using the data thus obtained, plot a curve showing phosgene flow versus float height of the rotameter. Use the same axes for this second curve as were used for the air flow versus float height calibration curve. Indicate on the phosgene flow versus float-height curve the height corresponding to a

flow of 840 ml. per minute, the phosgene flow required for the test.

8.1.2 *Calibration of the main flow orifice meter.* Calibrate the main flow orifice meter (8) against a standard orifice meter or with the aid of a pitot tube. Record the corresponding flows and pressure drops across the main flow orifice meter. Plot a calibration curve showing air flow versus pressure drop across the main flow orifice meter. Note the pressure drop corresponding to 12 c.f.m.

8.1.3 *Calibration of rotameter (effluent-air-sampling flow).* Connect the side outlet of qualitative bubbler (14) containing 15 ml. of potassium iodide-acetone solution to rotameter (13). Connect the top inlet of the bubbler to the outlet of a commercial gas meter (capacity approximately 10 liters per minute) of known accuracy. Leaving the inlet of the gas meter open to the atmosphere, vary the flow through the sampling line with needle valve (12). Record the float heights at various corresponding air-flow adjustments (ml. per minute). Plot air flows versus float heights. Mark the rotameter glass at the level corresponding to a flow of 1500 ml. (1.5 liters) per minute.

8.1.4 *Calibration of rotameter (concentration sampling flow).* Break the concentration flow line between the quantitative bubblers and valve (22). Connect the quantitative bubblers to the outlet of a dry gas meter (10 liters per minute capacity), leaving the inlet of the gas meter open to the atmosphere. Record corresponding float heights and air flows (ml. per minute) of rotameter (10). Plot air flows versus float heights. Mark the rotameter glass at the level corresponding to a flow of 500 ml. (0.50 ± 0.03 liters) per minute.

8.2 **Safety precautions.** All persons in the vicinity of the test should be equipped with service gas masks and be familiar with their use. Personnel should mask immediately when the odor of phosgene (similar to that of musty hay) is detected.

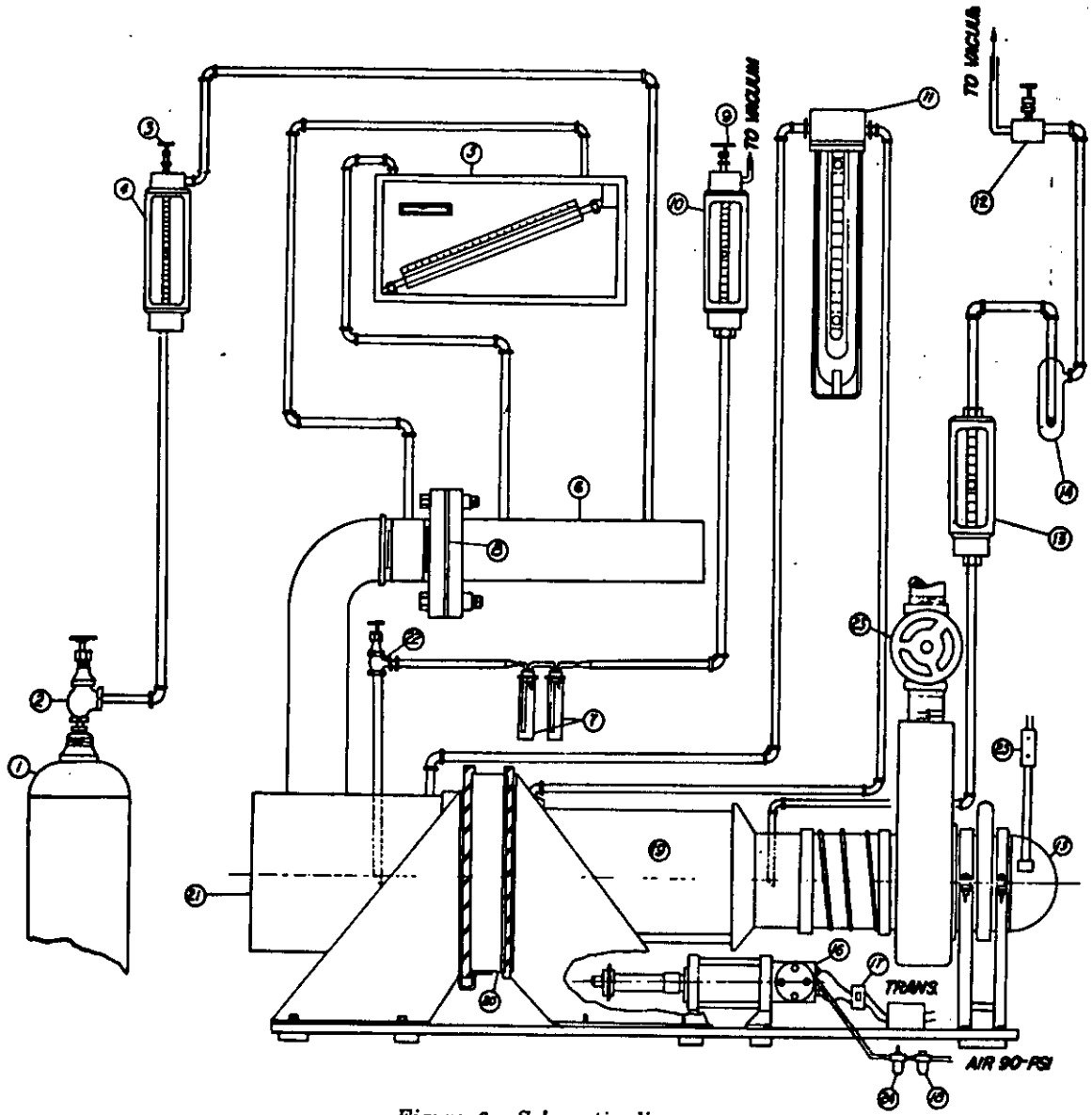

1. Phosgene cylinder, 150-lb. capacity.
2. Shut-off valve, phosgene cylinder.
3. Needle valve, phosgene flow.
4. Rotameter, phosgene flow.
5. Draft gage, main air flow.
6. Air intake.
7. Quantitative bubblers, concentration sampling flow.
8. Orifice meter, main air flow.
9. Needle valve, concentration sampling flow.
10. Rotameter, concentration sampling flow.
11. Air resistance, manometer.
12. Needle valve, effluent sampling flow.
13. Rotameter, effluent sampling flow.
14. Qualitative bubbler, effluent sampling flow.
15. Motor, blower.
16. Air cylinder and solenoid valve.
17. Switch, air clamp.
18. Water trap, compressed air line.
19. Carriage and mixer.
20. Filter, gas, M12.
21. Plenum.
22. Shut off valve, phosgene concentration sampling flow.
23. Gate valve, control of main air flow.
24. Lubricator, compressed-air line.
25. Switch, motor, blower.

Figure 2. Schematic diagram, penetrometer, filter testing, CG, E24.

DOP-SMOKE PENETRATION AND AIR RESISTANCE OF M13 PARTICULATE FILTER, 12-C.F.M.

1. SCOPE

1.1 This method describes the operating procedure for the E17 DOP-smoke-test apparatus used in evaluating M13 filters for determining smoke penetration and air resistance.

2. OUTLINE OF METHOD

2.1 Air from 80- to 100-p.s.i. line is passed through an air filter (37) (see fig. 8) and divided into two lines. The air in one line is reduced to about 10 p.s.i. by a pressure regulator (38) and is used to operate three air cylinders which control the flow of smoke. The pressure in the other line is reduced to 6 p.s.i. by two regulators (39) and the flow is passed through a second filter (40). This line is used for generation of the DOP smoke. It is divided into two streams; one to be passed through the generator (1) picking up vapor from the hot DOP; the other to be cooled by a water jacket (41) heated by the particle-size-control heater (42) and then reunited with the vapor-laden stream. The clear or quench stream quenches the vapor stream to form concentrated smoke. Controlling the flow of the vapor through the generator and controlling the temperature of the quench stream by the heater determines the particle size of the smoke. The concentrated smoke is carried to a valve system (43) which passes the smoke out an exhaust when not needed, or into the main air stream when testing. The main air stream is brought in by a blower (44) through an air filter (45). The total amount of air and smoke used in test is 12 c.f.m.

2.2 The main air stream, now containing smoke, is carried to the plenum (19) to which the test filter (18) is clamped. Definite amounts of the air-smoke mixture may be sent through three different paths. First, a 1.13-c.f.m. sample may be sent to the scattering chamber (47) as a 100 percent concentration. Second, a 0.175-c.f.m. sample may be sent to the particle size meter, called the Owl (23). Third, the entire flow may be passed through the test filter, after which a 1.13-c.f.m. sample of the stream, containing smoke which may have passed the filter, is drawn into the test line (46) and passed into the scattering chamber. The amount of smoke present is detected by a photoelectric cell and indicated on a meter (35) which has previously been calibrated by the 100 percent concentration of smoke and clean air. In all three cases, the bulk of the air-smoke stream passes to the atmosphere through the vent in the test clamp (20).

2.3 The smoke that has been passed through the Owl or the scattering chamber is pulled out through a vacuum pump through rotameters (22 and 24) which indicate the flow through the Owl and scattering chamber, respectively.

3. APPARATUS

3.1 The apparatus used for the test is illustrated in figures 3 through 7. Figure 8 is a flow diagram of the unit. Parts referenced by number in this method are listed in the legend and marked on the figures.

4. REAGENTS AND MATERIALS

4.1 Dioctyl phthalate (DOP). The dioctyl phthalate (di-2-ethylhexylphthalate) used in the smoke generator is produced by Union Carbide and Carbon Corporation under the trade name of "Flexol" plastizer DOP. Any equivalent grade of DOP may be used.

5. PRIMARY OPERATION

5.1 Fill the smoke generator with DOP to a point between the lower (2) and upper (3) red marks on the level indicating gage; the DOP level should be about one-third of the distance up from the lower mark. Set the timer (5) for 30 minutes, set the wall-heater variac (6) to approximately 73, and set the particle-size control (7) to 50. Set the selector valve (29) to the air position and open the air position and open the penetration sampling rotameter valve (24). Turn on the circuit breaker (17) and the master switch (8). Open the valve to the main air supply (this valve is not furnished with the equipment). Set the air-cylinder pressure (53) to about 10 p.s.i.

5.2 When the timer stops, it automatically switches the current through the heater from a high preheat current to the operating current. The temperature of the smoke generator as indicated on the thermometer (4) shall be checked periodically during the warm-up period. If the temperature reaches 150°C. before the timer stops, turn the timer to zero. Never allow the warm-up circuit to operate when the smoke generator temperature is at or above 150°C. Watch the immersion-heater light (9). When the light is on and off for about equal intervals, the generator is at operating temperature. If the light is on more than off, increase the wall heater (6) setting. If the light is off more than on, decrease the setting. Never change the setting more than three divisions at a time. At operating temperatures the generator thermometer should not read higher than 190°C.

5.3 Calibration.

5.3.1 Place a test filter (18) between the plenum (19) and the clamp (20). Set the selector valve (29) to the air position. Turn the hand-automatic switch (10) to HAND and press the operate button (11). Set the smoke-generator pressure at 6 p.s.i. (12). See that the vacuum gage (54) reads between 2 and 10 inches, if not, open the circular cover below the gage and adjust the relief valve until the vacuum is within limits. Refer to the calibration curve for the quenching air manometer (13) and adjust the quenching air control (14) to obtain a manometer reading equivalent to 2.40 c.f.m. Refer to the calibration curve for the vapor-flow manometer (15) and adjust the vapor-flow control (16) to obtain a manometer reading equivalent to 1.45 c.f.m. Recheck the smoke-generator pressure and correct if necessary to maintain a reading of 6 p.s.i. Recheck the quenching air and vapor-flow manometers and correct if necessary. Adjust these three settings until all are correct.

5.3.2 Refer to the calibration curve for the test-flow manometer (33) and adjust the test-flow control (34) to obtain a manometer reading equivalent to 12 c.f.m.

5.3.3 Push in the valve (21) to the Owl. Adjust the rotameter valve (22) for a flow of 0.175 c.f.m. Look into the eyepiece of the Owl and adjust the focus by moving the eyepiece in or out until the line between the fileds of the bipartite polaroid disk is sharply defined. Rotate the polaroid disk with the pointer on the scale until the two halves of the field appear to have the same intensity, and read the scale. Repeat the operation. The two readings should agree to within 1°. Take two readings on the opposite side of the scale. If the scale zero has been properly centered, the four readings should agree to within 1°. If a greater discrepancy between the opposite sides of the scale is found, loosen the clamp and adjust the scale to obtain the desired agreement of readings. Take the

average of the four readings as the true reading. An Owl reading of 29° indicates the correct particle size (about 0.3-micron average diameter). If a low Owl reading is obtained, increase the vapor-flow control (16); if a high reading is obtained, decrease the control. Make another reading. When the reading is within 2½° of 29°, make further adjustments with the particle-size control (7) until a reading of 29° ± 1° is obtained. Increasing the control setting decreases the Owl reading. After adjustment is completed, pull out the valve to the Owl.

5.3.4 Adjust the penetration sampling rotameter valve (24) until the top bevelled edge of the float is level with the red line to obtain an air flow of 1.13 c.f.m.

6. TEST OPERATION—MANUAL

6.1 Turn the selector valve (29) to the air position. Turn on the percent-penetration indicator (35) with the power switch (25). Allow 5 minutes for warmup. Turn on the cell lamp (26) and set the hand-automatic switch on HAND.

6.2 Turn the indicator-selector switch (27) to meter zero. Adjust the meter-zero control (28) to set the meter pointer at zero. Turn the indicator-selector switch to the 100 percent position. Place a test filter in position and press the operate button. Turn the selector valve to the 100 percent position. Adjust the meter to 100 with the coarse-and fine-gain controls (31 and 32). Turn the selector valve back to air. Switch the indicator-selector switch to the 0.1 per cent position and adjust the meter to zero with the stray-light-compensation control (30). Recheck and adjust the 100 percent and stray-light settings if necessary. Whenever the coarse- or fine-gain controls are moved, recheck the stray-light setting. The photocell in the scattering chamber is extremely sensitive and may lose its linearity or be permanently damaged by one of the following conditions:

(a) Exposure to room light while power is applied from the indicator unit.

(b) Exposure to strong light resulting from 100 percent smoke in the chamber without the light filter (48) in place.

The light filter is lowered into place automatically when the indicator-selector switch is turned to the 100 percent position. Therefore, never turn the selector valve to the 100 percent position unless the indicator-selector switch is turned to the 100 percent position. Never press the operate button unless a filter is in place or the indicator-selector switch is in the 100 percent position.

6.2.1 The calibrate and read-volts positions of the selector switch are for maintenance purposes only. In the calibration position the meter should read approximately full scale. The meter should read 50 to 90 with the switch in read-volts position.

6.3 Check particle size, test-flow manometer, meter-zero, stray-light, and 100 percent positions as indicated in Section 5 and paragraphs 6.1 and 6.2. Correct for any changes. Set the indicator-selector switch to 100 percent and the selector valve to the penetration position. Read the apparent filter resistance on the filter-resistance manometer (51) and convert to true filter resistance in accordance with 8.1. Read the penetration meter. If the reading is less than 10, turn the selector switch to the 1.0 percent position. Now each division on the meter scale represents 0.02 percent DOP concentration. If the reading is less than 10 (0.1 percent) turn the switch to 0.1 percent and read the meter. Each division of the scale represents 0.002 percent DOP penetration at this setting.

6.4 Return the indicator-selector switch to the 100 percent position. Turn the selector valve to the filter-clamp-open position and press the release button (50). Smoke will flow out the exhaust. Remove the tested filter and insert the next test filter. Set the selec-

tor valve to the penetration position and determine the smoke penetration for this filter as outlined in 6.3.

6.5 If a long series of tests are being made at one time, perform the tests in close succession. Readjust the 100 percent setting as required by generator fluctuations, and check the meter-zero and stray-light settings every 5 to 10 minutes. Check particle size every 5 to 10 minutes. By turning the time switch (36) to TIME IN, the clamp will automatically open about 7 seconds after it is closed, giving time to read the resistance and penetration. Change test filters and press the operate button to start the next test period. If tests are not made in rapid succession, check particle-size and the 100 percent position before each test.

6.6 Between a series of tests or tests which are spaced out, when the generator is on but no tests are being made, set the selector switch at meter zero and turn the selector valve to the filter-clamp open position to flush out the scattering chamber and divert the smoke out the exhaust.

7. TEST OPERATION—AUTOMATIC

7.1 Operation is essentially the same as manual, except as follows:

Turn the hand-automatic switch to AUTOMATIC. Turn the selector valve to FILTER CLAMP OPEN to open the clamp, and turn the valve to PENETRATION to close the clamp. Neither the release nor the operate button must be touched. Make all adjustments and readings in accordance with 6.1 through 6.4 as usual. Check meter zero, stray light, 100 percent position, and particle size every 5 to 10 minutes.

8. MEASUREMENT OF AIR RESISTANCE

8.1 To obtain air resistance of a filter at its rated flow, set the selector valve at the penetration position and read the air-resistance manometer (51) in inches of water. Subtract from this reading a blank reading previously determined by measuring the resistance of the system with an empty filter frame clamped in place (indicator-selector switch in 100 percent position). The air-resistance manometer reading less the blank reading is the true air resistance of the filter.

9. SHUT DOWN

9.1 Turn the selector valve to FILTER CLAMP OPEN and turn off the master switch (8). Allow the equipment to cool for half an hour. Turn off the compressed air. Turn off the circuit breaker after half an hour.

10. MAINTENANCE

10.1 Check the DOP level daily, when the generator is hot, to see that it is between the two red marks. Do not add DOP unless the level is below the lower red mark when the generator is at the operating temperature. Drain and replace the DOP at least once a month.

10.2 Check the light bulbs in the Owl and scattering chamber daily.

10.3 Drain the compressed-air-line filter twice weekly by opening the drain cock located at the bottom of the filter while the air pressure is on (37). The screen inside the filter should be cleaned once a month. Turn off the air pressure, unscrew the plug at the top of the filter and lift out the screen.

10.4 Oil (SAE No. 10) should be added to the lubricator weekly.

10.5 The drip legs (49) should be opened once a day and any accumulated DOP drained. Be sure to close the cocks before continuing operation.

10.6 The relief valve (52) must be slightly open if smoke particles of the proper size are to be obtained. The valve is set correctly when the unit is first tested but may be

changed during shipment or use. The valve may be set during normal operation of the unit. Place a test filter in the clamp and turn the selector valve and indicator switch to the 100 percent positions. Shut off the relief valve and check that the meter reads 100 percent. While another person watches the meter, slowly open the relief valve until the needle begins to move down from 100 percent. This is the correct setting.

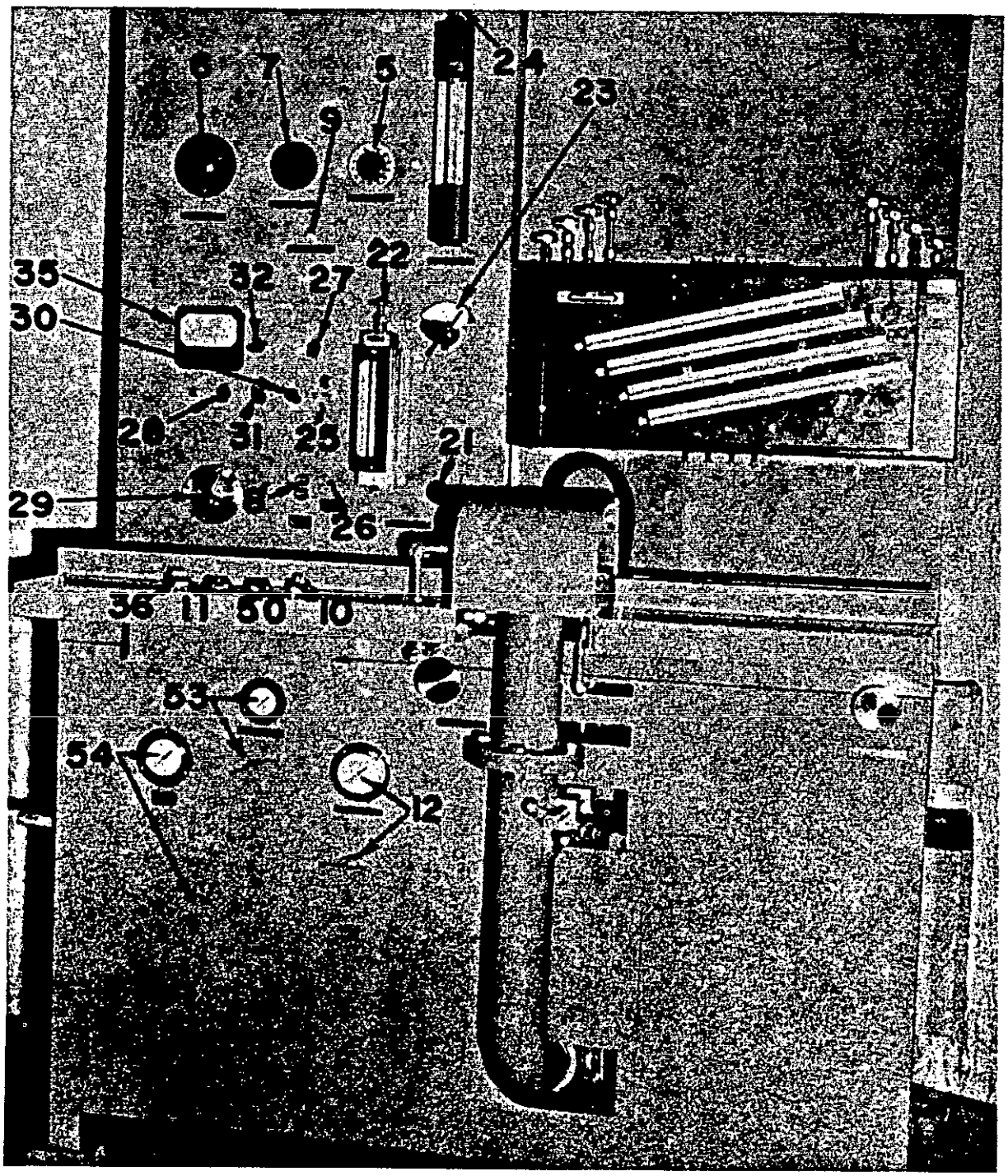

Figure 3. Penetrometer, front view.

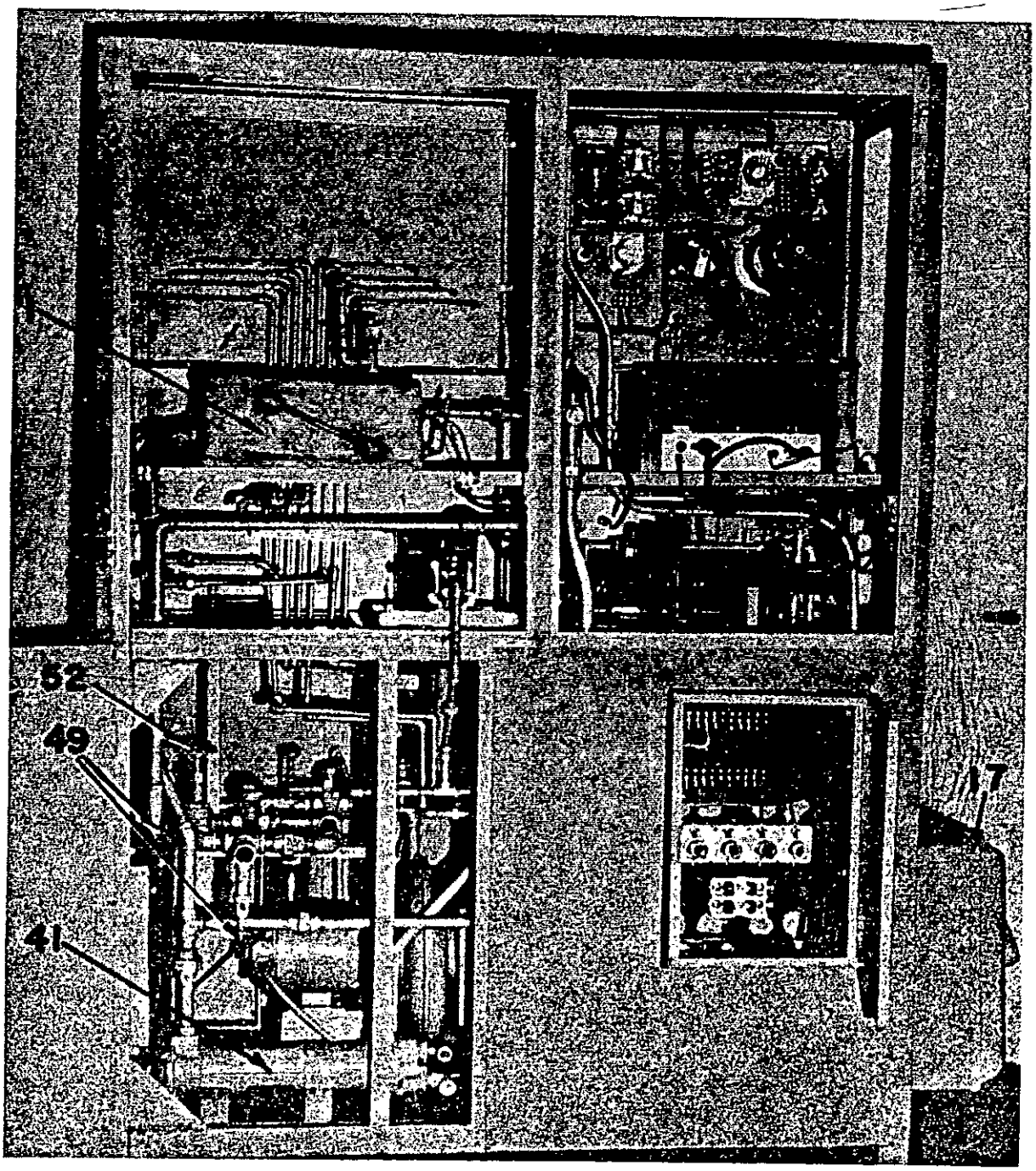

Figure 4. Penetrometer, rear view.

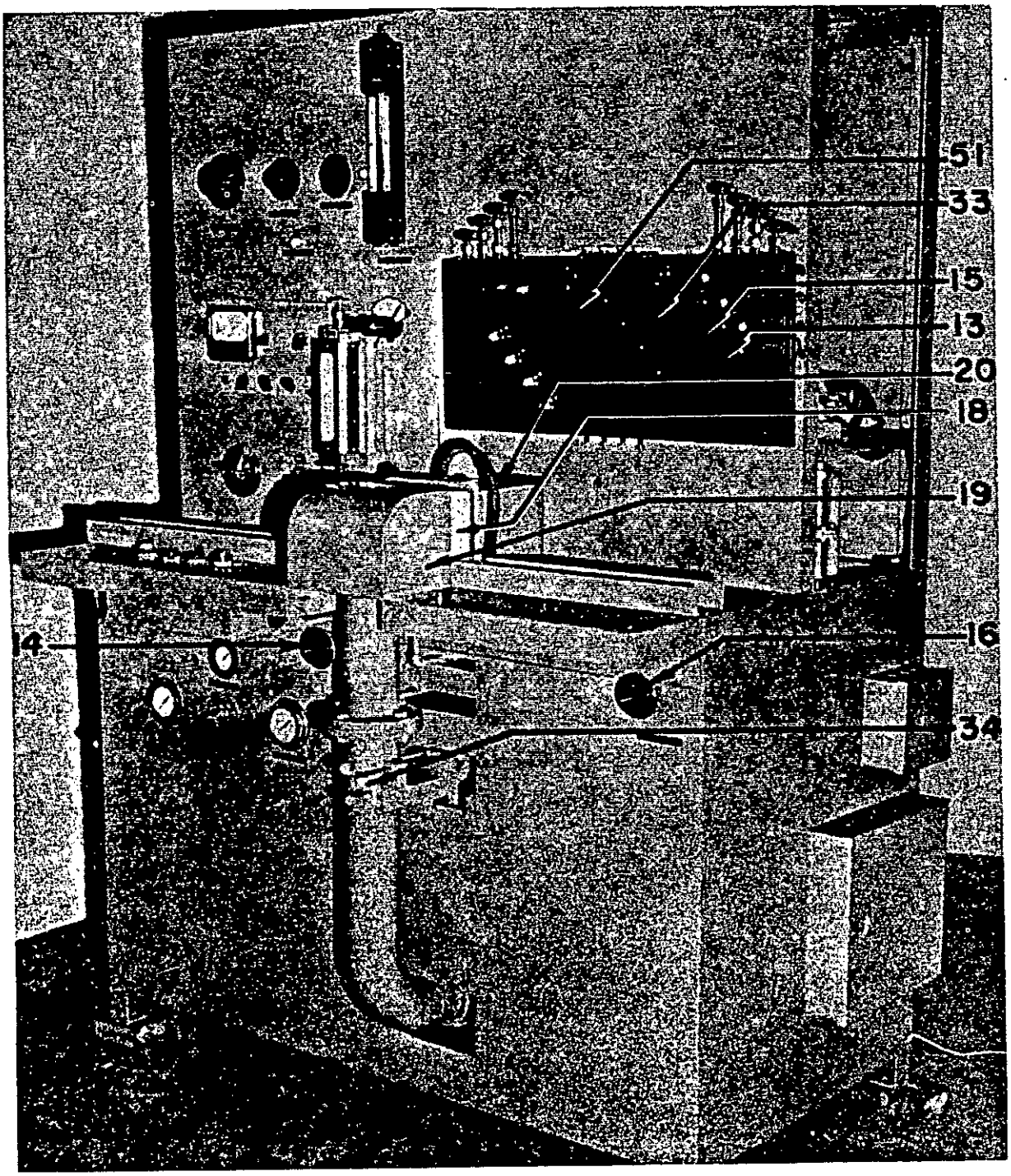

Figure 5. Penetrometer, right-front view.

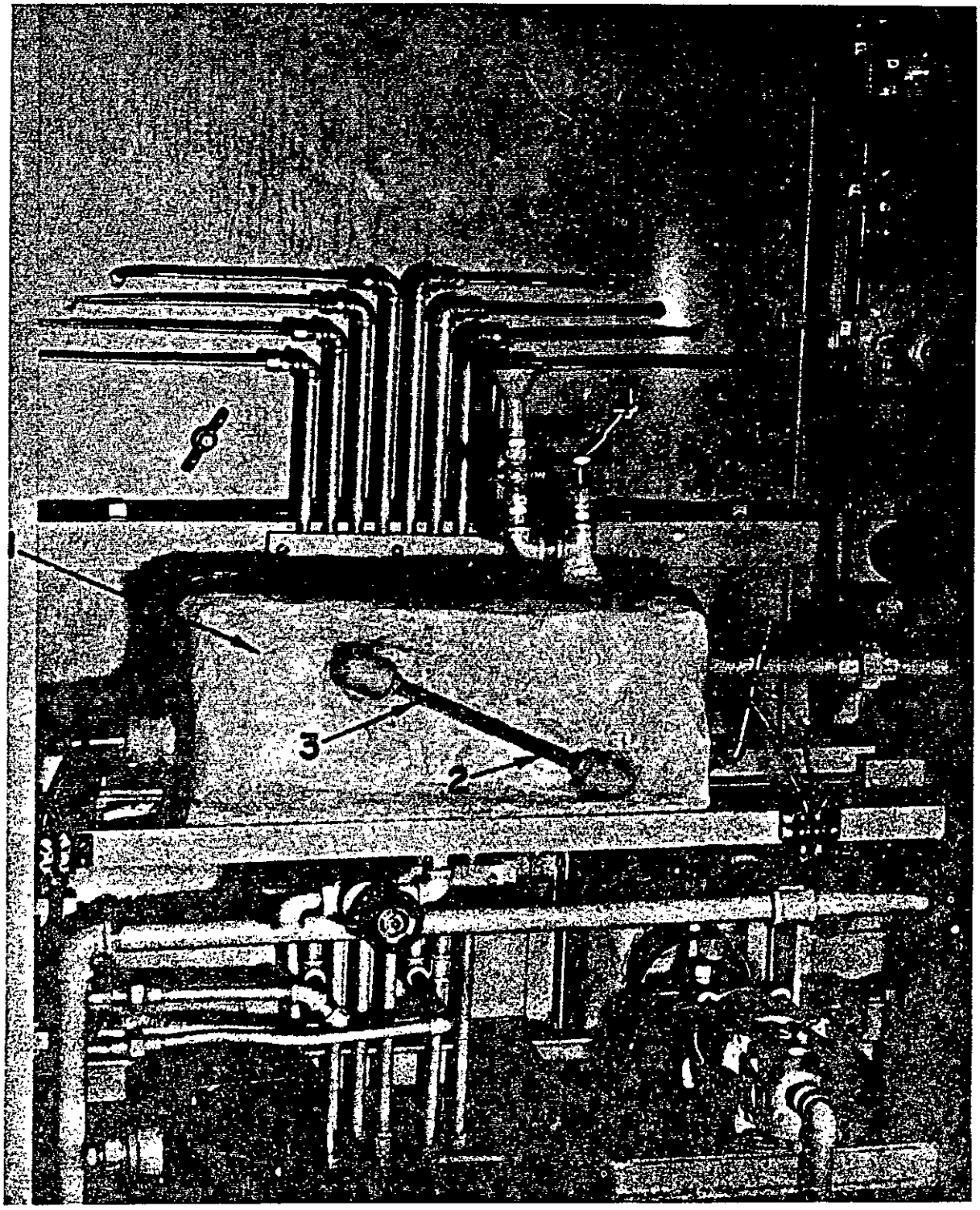

Figure 6. Smoke generator.

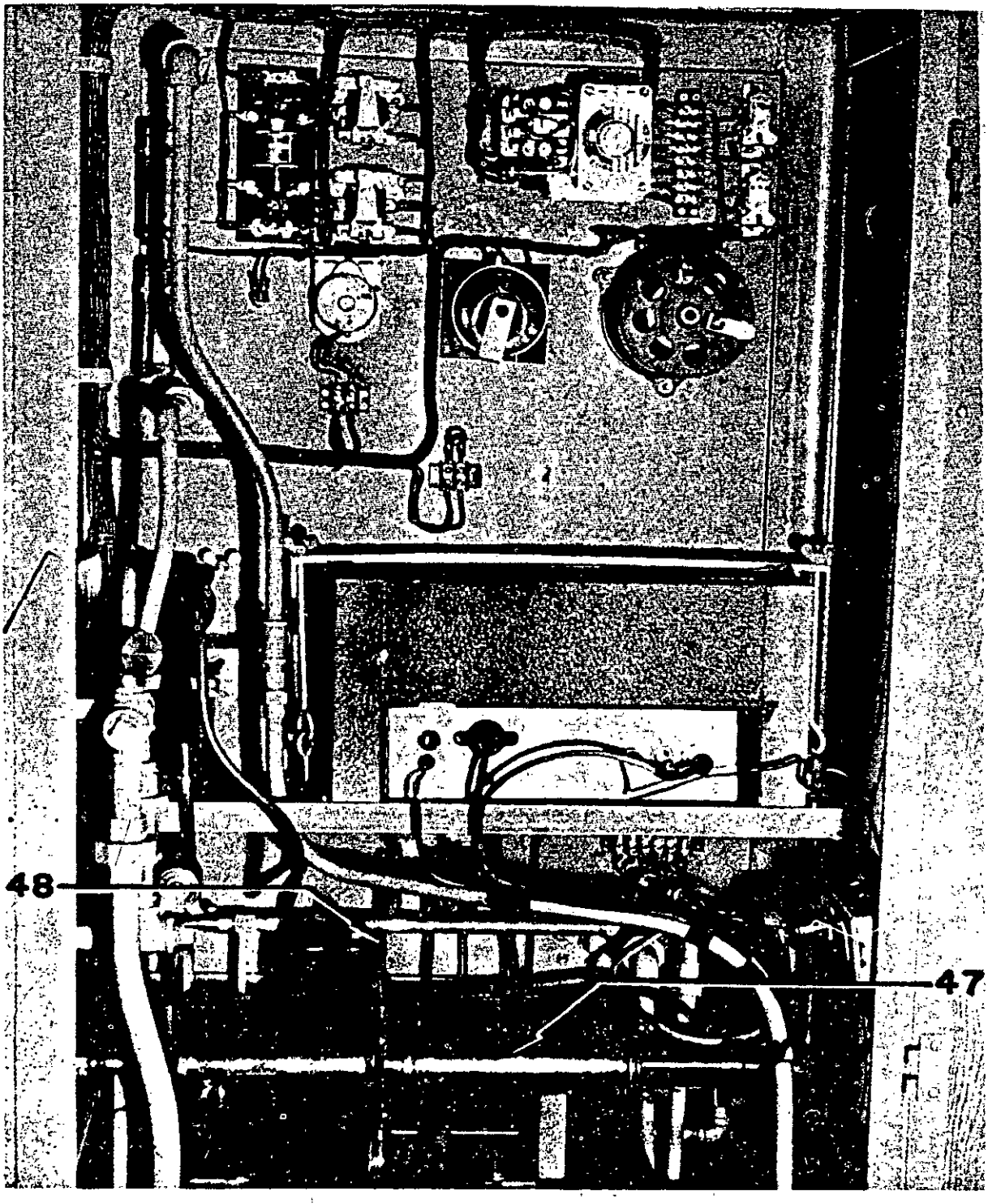

Figure 7. Scattering chamber.

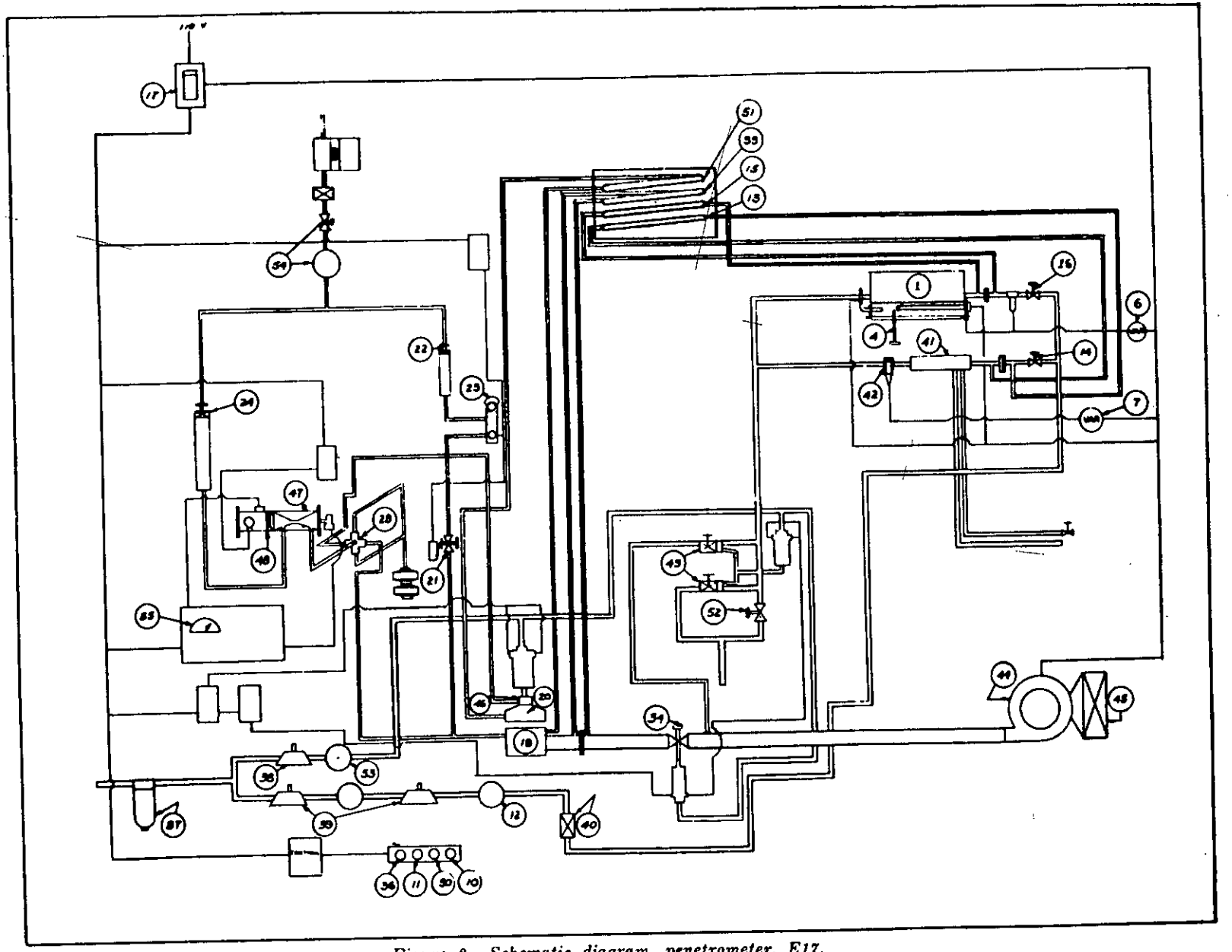

Figure 8. Schematic diagram, penetrometer, E17.

1. Generator, smoke.
2. Gage, lower-mark.
3. Gage, upper-mark.
4. Thermometer.
5. Timer.
6. Heater, wall.
7. Control, particle-size.
8. Switch, master.
9. Light, immersion-heater.
10. Switch, hand, automatic.
11. Button, operate.
12. Pressure gage, smoke-generator.
13. Manometer, quenching-air.
14. Control, quenching-air.
15. Manometer, vapor-flow.
16. Control, vapor-flow.
17. Circuit breaker.
18. Filter, test.
19. Plenum.
20. Clamp.
21. Valve, Owl.
22. Rotameter, Owl.
23. Owl.
24. Rotameter, penetration-sampling.
25. Switch, power.
26. Switch, cell-lamp.
27. Switch, indicator-selector.
28. Control, meter-zero.
29. Valve, selector.
30. Control, stray-light-compensation.
31. Control, coarse-gain.
32. Control, fine-gain.
33. Manometer, test-flow.
34. Control, test-flow.
35. Meter.
36. Switch, time.
37. Filter, air.
38. Regulator, pressure.
39. Regulators, pressure (two).
40. Filter, air.
41. Jacket, water.
42. Heater, particle-size-control.
43. System, valve.
44. Blower.
45. Filter, air.
46. Line, test.
47. Chamber, scattering.
48. Filter, light.
49. Legs, drip.
50. Button, release.
51. Manometer, filter-resistance.
52. Valve, relief.
53. Cylinder, air-pressure.
54. Gage, vacuum and valve, control.

Legend—Figures 3 through 8

DOP-SMOKE PENETRATION OF AEROSOL-FILTER ELEMENT

1. SCOPE

1.1 This method describes the operating procedure for the E27 DOP-smoke-penetration meter in evaluating the smoke penetration of aerosol-filter elements.

2. OUTLINE OF METHOD

2.1 The outline of method is the same as the outline for the M11 canisters in Method 502.1.1.

3. APPARATUS

3.1 In addition to the apparatus referred to for testing M11 canisters, an adapter is incorporated in the E27 smoke-penetration meter to make possible the testing of aerosol-filter elements.

3.2 The adapter consists of two units which fit into the upper and lower chuck jaws (57, fig. 18) respectively, and three special holding screws. The screws are made with a smooth shaft projecting beyond the threads, and are supplied with gaskets. The upper adapter head is the larger, and fits over the lower head. The upper adapter contains three slots in the side wall, and a circular groove in the top outer face. The lower adapter has a smaller port and two concentric ridges in the bottom outer face.

4. REAGENTS AND MATERIALS

4.1 **Dioctyl phthalate (DOP).** The dioctyl phthalate (di-2-ethylhexylphthalate) of Union Carbide and Carbon Corporation, sold under the trade name "Flexo 1" plasticizer DOP is used in the smoke generator unit. Any equivalent grade of DOP may be used.

5. PREPARATION OF APPARATUS

5.1 Prepare the E27 smoke-penetration meter in accordance with Method 502.1.1 and add the aerosol-filter-element adapter as follows:

5.1.1 First remove the three blind screws in the outer wall of the upper chuck jaws. These screws merely seal the adapter holes when the meter is testing canisters. Next, fit the groove in the top adapter against the coil spring in the upper jaw of chuck (57) and push upward until the slots in the adapter are aligned with the three screw holes in the chuck, and insert the adapter screws into place. The adapter head now rides on the screw shafts in the slots, and tension on the adapter is supplied by the coil spring. The lower adapter head simply rests in the lower chuck. The two ridges seal the unit against the rubber gasket around the outlet port of the chuck.

6. OPERATION

6.1 The operation of the E27 DOP-smoke-penetration meter is the same as described in Method 502.1.1 for M11 canisters with the following execptions:

6.1.1 Set the right red pointer to the maximum value of smoke penetration allowed for the filter element.

6.1.2 Slip the outer groove of the filter to be tested over the circumference of the lower adapter head. When the chuck is closed, there will be an initial surge of the meter that will carry the needle against the right hand red pointer, lighting the NO–GO bulb (44) as the READY light is extinguished. If the filter is acceptable, the needle will drop down to indicate numerically the percent penetration, and the light will change from NO–GO to GO (45). Should the needle stay against the pointer after the initial surge, and the NO–GO light remains on, the filter is rejected.

7. SHUTDOWN

7.1 The shutdown procedure is the same as employed in Method 502.1.1 with the following addition.

7.1.1 When the adapter is removed, the adapter screws must be replaced by the three blind screws with their gaskets. The limiting contact on the percent-penetration meter must also be reset to the maximum allowable penetration value for the aerosol-filter element under test.

8. NOTES ON MAINTENANCE

8.1 The same maintenance checks are made as described in Method No. 502.1.1.

DOP-SMOKE PENETRATION AND AIR RESISTANCE OF FILTERS

1. SCOPE

1.1 This method describes the operating procedure for the E18 smoke penetrometer in evaluating the smoke penetration and air resistance of filters.

2. OUTLINE OF METHOD

2.1 Room air is drawn through a filter precleaner at approximately 1200 c.f.m. and divided into three streams. A vapor stream flows at approximately 85 c.f.m. through a duct where it is heated, and passes over the surface of liquid DOP (dioctyl phthalate); a second stream (quenching) flows at approximately 265 c.f.m. through a duct where it is cooled, then slightly heated. The mixing of the vapor and quenching streams forms an aerosol of DOP, the particle size of which is relative to the temperature difference of the vapor and quenching air streams. A third stream (diluent, main-duct) flows at approximately 850 c.f.m. into the mixing chamber where it dilutes and uniformly disperses the smoke-laden air passing from its vapor and quenching air streams.

2.2 During test the smoke is taken from the mixing chamber into a test air stream at a rate of flow equal to the rated capacity of the test filter. The smoke which passes through the test filter is measured by the percent-penetration indicator.

2.3 The particle size of the smoke is determined by passing a sample of the smoke through the particle-size meter, OWL, and noting the degree of polarization of a light beam.

3. APPARATUS

3.1 The apparatus employed in the test is illustrated in figure 9. All parts designated by number in the text correspond to the parts shown on the figure (see legend). The apparatus functions essentially as follows:

3.1.1 Clean air is supplied by motor blower (2) through air filter (1).

3.1.2 A portion of the incoming air is controlled by damper (5), diverted through the hot air duct, and measured with a flowmeter consisting of orifice (7) and draft gage (58). The air passes into the insulated portion of the hot air line and is heated by 36 electric fin heaters (10, 11), to a temperature of about 400°F. These heaters are located in bays 1, 2, and 3. Twelve fin-strip heaters, located in bay 1, are controlled by an adjustable thermostat (84) to produce an air temperature of about 400°F. Eight of the twelve fin-strip heaters located in bay 2 are connected directly to the power line and four are adjusted by means of variac #1 (50). Eight of the twelve fin-strip heaters located in bay 3 are connected directly to the power line and four are adjusted by means of variac #2 (51). After being heated, the air is impinged on the surface of liquid DOP in reservoir (14). The DOP is in turn heated by strip generator-jacket heaters (13), and immersion heaters (12). The strip heaters are adjusted by means of variac #3 (52). The immersion heaters, controlled by means of thermoregulator (16) and a relay, hold the DOP to a constant temperature of 390° ± 2°F. As the heated air passes over the surface of the hot DOP it becomes saturated

with DOP vapor, and when it strikes the cooler quenching air stream a liquid smoke is formed. A second portion of the air from motor blower (2) is controlled by damper (4), diverted through the quenching air line, cooled to approximately 65°F. in air cooler (6), and measured with a flowmeter consisting of orifice (8) and draft gage (59). The temperature is held from 70° to 72°F. by electric fin-strip heaters (18) located in bay 4, which are adjusted by means of variac #4 (53). Each of the four variacs used to control the heaters have pilot lights (49) in their circuits to indicate whether the voltage is on or off. The quenching and saturated vapor-air streams mix, forming the liquid smoke, and immediately passes into the mixing chamber (19). A third portion (diluent) of the air from the motor blower (2) is controlled by blast gate (3), diverted through the diluent air line, and measured with a flowmeter consisting of orifice (9) and draft gage (60). From the orifice the air passes into the mixing chamber (19).

3.1.3 The smoke passes through the mixing chamber (19) where it is diluted and uniformly mixed. Blast gates (20) and (23), are actuated by air cylinders (25) and (24), respectively. The compressed air that operates the air cylinder (24) and (25) is controlled electrically by a microswitch attached to the 4-way selector valve (45). When the selector valve (45) is set in the 100 percent, air, or penetration positions, blast gate (20) closes and (23) opens, and the air-smoke mixture passes through a flowmeter which consists of orifice (26) and draft gage (54), then through the test plenum (27) and into the test filter. The air cylinder (31) which clamps the test filter (28) in place is actuated at the same time and by the same mechanism as air cylinders (24) and (25). Blast gate (22) is set partially open to allow just enough air-smoke mixture to pass from the mixing chamber to maintain the rated air flow of the test filter. When the selector valve (45) is moved to the FILTER CLAMP OPEN position, another set of microswitches is actuated, the blast gate (20) is opened, and blast gate (23) is closed, and the clamp (29) is released. In the FILTER CLAMP OPEN position the air-smoke mixture passes into the stack (21) and room air is drawn by the vacuum system through filter (76) flushing out the scattering chamber (68). The OPERATE and RELEASE push buttons (48), mounted on the instrument panel may be used to operate air cylinders (24), (25), and (31) and filter clamp (29) independently of the selector valve (45) when the MANUAL-AUTOMATIC toggle switch (80) is thrown to the MANUAL position.

3.1.4 A sampling line connects the test plenum (27) to the draft gage (55) to obtain the air resistance of the test filter (28) at the rated air flow.

3.1.5 A sampling line carries smoke from the test plenum (27), (the filter influent), to the Owl (43), which is used in the measurement of the particle size of the DOP aerosol. By opening and adjusting valve (44) to an air flow of 1.13 c.f.m., then opening valve (42) to full flow, smoke is drawn through the Owl at the proper rate of flow. Valve (88) is preset to pass 0.18 c.f.m. through the Owl. When valve (42) is open and valve (44) is correctly set, draft gage (56) will read 1.13 c.f.m. No penetration measurements should be made while the Owl is being used. The Owl contains a 50-candlepower automobile headlight bulb (65) as the source of light, a lens, a bipartite disk (64), a scale (63), and pointer.

3.1.6 Filtered smoke passes through the sampling line and selector valve (45) to the scattering chamber (68) for the smoke-penetration test. Unfiltered smoke passes through the selector valve and scattering chamber for calibration for the percent-penetration indicator. An air filter (76) is mounted on the sampling line intake to flush out the scattering chamber (68) when compensating for stray light.

3.1.7 The scattering chamber (68) is so arranged that when no smoke is present, no light (the source of which is a 50-candlepower, 6-volt bulb) reaches the photomultiplier tube. Smoke particles in the scattering chamber scatter the light, and activate the photocell in proportion to the concentration of the smoke. The light source is maintained at a uniform intensity by use of a constant voltage transformer. When the raw, unfiltered smoke is used, a light filter (70) is inserted in the light beam to prevent overloading the phototube.

Note. Photo cell (67) is extremely sensitive and may lose its linearity or be permanently damaged by one of the following causes:

(a) Exposure to room light while power is applied from the indicator units.

(b) Exposure to strong light resulting from 100-percent smoke in the chamber without light filter (70) in place. The light filter is lowered into place automatically when selector valve (45) is turned to the 100 percent position. Therefore, never close the clamp manually unless selector valve (45) is at the 100 percent position and never turn selector valve (45) to the penetration position unless a test filter unit is in place.

3.1.8 The percent-penetration-indicator unit (38) supplies direct current for the photomultiplier tube (67). This unit indicates the relative concentration of smoke, and provides a means of compensating for stray light when no smoke is present in the smoke cell.

4. REAGENTS AND MATERIALS

4.1 Dioctyl phthalate (DOP). Dioctyl phthalate (di-2-ethylhexylphthalate) of Union Carbide and Carbon Chemical Corporation, sold under the trade name of "Flexol" plasticizer (DOP) is used in the smoke-generator unit. Any equivalent grade of DOP may be used.

5. PRIMARY OPERATION

5.1 Fill the DOP reservoir (14) to the level indicated by the etched mark in the gage glass (15). Engage disconnect switches (83) and push START button (46) which starts motor blower (2). Turn on heater and equipment master switch (87-h). The flow from the hot air line should be about 85 c.f.m. as indicated by draft gage (58). Correct with damper (5) if necessary. The quenching air flow should be about 265 c.f.m. as indicated by draft gage (59). Correct with damper (4) if necessary. The diluent air flow should be about 850 c.f.m. as indicated by draft gage (60). Correct with blast gage (3) if necessary.

Note. Adjustment of the flow in any one of the above three lines will affect the flows in the others; therefore, it will be necessary to readjust the flows in the other two lines. The air resistance of the air filter (1) on the blower intake, as indicated on draft gage (57), should be less than 3 inches of water (gage). If the filter resistance is 3 inches or more, replace with a fresh filter.

5.2 Set variacs (50), (51), (52), and (53), to a setting of 50 (or the setting found satisfactory during previous operation), and see that lights (49) are on. The DOP heaters (12), regulated by the thermoregulator (16), are turned on when the master switch (87-h) is closed.

5.2.2 Approximately 45 minutes after the heat is turned on, the generator should have attained a constant temperature. The air in the hot air line should be about 365°F. as indicated by thermometer (77). Adjust variacs #1 (50) and #2 (51) if necessary. The temperature of the DOP should be 390° ± 2°F. as indicated by thermometer (78). Thermoregulator (16) maintains the DOP at 390° ± 2°F. automatically. The DOP is at the correct temperature when the immersion-heater light (47) remains on for approximately the same period of time that it remains off. This interval is controlled by adjusting variac #3 (52). If the immersion-heater light (47) remains on for a longer

time than it remains off, variac #3 (52) should be turned to a higher value by a few scale divisions at a time. If the pilot light remains on for a shorter period of time than it remains off, variac #3 (52) should be turned to a lower value by a few scale divisions at a time. The air in the quenching air line should be about 72°F. as indicated by the thermometer (79). Adjust variac #4 (53) if necessary.

6. MAINTAINING PROPER SMOKE-PARTICLE SIZE

6.1 Place a test filter (28) in position. Set selector valve (45) to the penetration position. Adjust the air flow, as indicated on testing orifice draft gage (54), to the rated flow of the test filter, by means of a blast gate (22).

6.2 Determination of smoke-particle size.

6.2.1 Pull out valve (42) (closed position) and open valve (44) to an air flow of 1.13 c.f.m. as indicated on scattering chamber draft gage (56). Then push in valve (42) completely so that smoke laden air is drawn through Owl (43). The draft gage (56) should read 1.13 c.f.m. (see 3.1.5). Owl lamp (65) is turned on when valve (42) is pushed in. Look into the eyepiece. If the line between the fields of the bipartite polaroid disk (64) is not sharply defined, adjust the focus by moving the eyepiece in or out. Rotate the polaroid disk with the pointer on scale (63) until the two halves of the field appear to have the same intensity, then read scale (63). Repeat the operation and note the reading again. The two readings should agree within 1°. In the same manner take readings on the opposite side of the scale. If the scale zero has been properly centered, the four readings should agree within 1°. If a greater discrepancy between the opposite sides of the scale is found, loosen the clamp screw and adjust the scale so that the readings on either side of the scale agree within 1°. Take the average of the four readings as the true reading. An Owl reading of 29° to 30° indicates the correct particle size, (about 0.3 micron, average diameter). If a low Owl reading is obtained, increase the temperature of the quenching air as registered on the thermometer (79) by one or more of the following methods. First, increase the heat of the fin-strip heaters (18) by adjusting variac #4 (53), second, decrease the flow of water through air cooler (6); third, decrease the air-flow rate of the quenching air by adjusting damper (4). If a high Owl reading is obtained, decrease the quenching air temperature by reversing one or more of the above adjustments. After each adjustment, wait about 5 minutes before reading the Owl.

7. ADJUSTMENT OF PERCENT-PENETRATION INDICATOR

7.1 Turn the red knobs of percent-penetration indicator (38) so that both red contact needles are off scale.

7.2 Turn indicator-selector switch (38) to meter-zero position. Adjust the meter-zero control knob (40) to bring needle of meter (33) to the zero position. Switch selector valve (45) to AIR position. Switch indicator-selector switch (35) to the 0.1 percent position. Adjust meter (33) to zero with the stray-light compensation control (37). Turn indicator-selector switch (35) to the 100 percent position. Turn selector valve (45) to the 100 percent position. Adjust meter (33) to 100 with coarse- and fine-gain controls (39) and (34). Recheck and adjust the meter-zero and stray-light settings if necessary. Whenever the coarse- or fine-gain control is used, recheck meter-zero and stray-light settings.

7.3 The CALIBRATE and READ-VOLTS positions of selector switch (35) are for maintenance purposes only. In the calibrate position the meter (33) should read approximately full scale. The meter should read approximately 50 to 90 in the read-volts position.

8. OPERATION

8.1 Set selector valve (45) to the penetration position and indicator-selector switch (35) to the 100 percent position. Adjust the air flow to the test filter (see 6.1), read the filter resistance on draft gage (55) (see 8.5) and read the DOP penetration on meter (33). If the reading of meter (33) is less than 20, turn scale switch (35) to the 1.0 percent position. At this position of the scale switch, each division on the microammeter scale represents 0.02-percent DOP penetration. If the reading is less than 10 (one-tenth percent) turn the scale switch (35) to the 0.1 percent position and read the microammeter. At this position the full scale of the microammeter represents one-tenth percent, and each division represents a 0.002-precent DOP penetration.

8.2 Return the scale switch to the 100 percent position. Turn selecter valve (45) to the FILTER-CLAMP-OPEN position so that the smoke flows up the stack. Remove the tested filter and insert the next test filter. Set selector valve (45) to the penetration position and determine the smoke penetration of this filter as outlined in 8.1.

8.3 If a long series of tests are being made at one time, perform the tests in close succession, checking the setting of the 100 percent position (see 7.2) as the fluctuations of the generator require. Readjust meter-zero and stray-light settings as outlined in 7.2. Generally, once every 5 to 10 minutes will suffice. Check and adjust the smoke-particle size every 5 to 10 minutes, if necessary. If the series of tests on the filters are not made in rapid succession, check the particle-size and the 100-percent position (see 7.2) just before each test.

8.4 Between a series of tests or between individual tests of an intermittent program, when the smoke generator is on but no tests are being made, set the indicator-selector switch at meter zero, and turn the selector valve (45) to the FILTER-CLAMP-OPEN position to flush out the scattering chamber (68) and divert the smoke up the stack.

8.5 **Measurement of air resistance.**

8.5.1 To obtain the air resistance of a filter at its rated flow, set selector valve at the penetration position, and read the draft gage (55), in inches of water. Subtract from the reading obtained a blank reading previously determined by measuring the resistance of the system with an empty filter frame clamped in place of the test filter. The draft-gage reading minus the blank is the air resistance of the filter.

9. SHUT DOWN

9.1 Turn selector valve to FILTER-CLAMP-OPEN position and sweep the smoke cell with filtered air for several seconds. Turn off heater and equipment master switch (87–h). Allow several minutes for the equipment to cool, then push STOP button (46). Throw off disconnect switches (83).

10. NOTES ON MAINTENANCE

10.1 Check DOP level daily. Fill to the etched mark in glass gage (15) through filling cock (17).

10.1.1 Drain and replace the DOP at least once every month.

10.2 Check the light bulb (65) in the Owl and bulb (69) in the scattering chamber daily.

10.3 Drain the compressed-air-line filter twice weekly by opening the drain cock located at the bottom of the filter while the air pressure is on.

10.3.1 The screen inside the compressed air filter should be cleaned once a month. Turn off the air pressure, unscrew the plug at the top of the filter and lift out the screen.

10.4 Oil (SAE No. 10) should be added to the lubricator weekly.

1. Air filter, blower-intake.
2. Motor blower, air-supply.
3. Blast gate, diluent-air-line, main-duct.
4. Damper, quenching, air-line.
5. Damper, hot-air-line.
6. Air cooler, quenching, air-line.
7. Orifice, hot-air-line.
8. Orifice, quenching, air-line.
9. Orifice, diluent-air-line.
10. Air heaters, adjustable-voltage.
11. Air heaters, thermostat-control.
12. DOP heaters, immersion.
13. DOP heaters, strip, generator-jacket
14. Reservoir, DOP.
15. Level gage, glass.
16. Thermoregulator, DOP-tempearture.
17. Filling cock, DOP.
18. Air heaters, quenching, air-line.
19 Mixing chamber.
20. Blast gate, stack.
21. Stack.
22. Blast gate, test-air-line.
23. Blast gate, shut-off.
24. Air cylinder, blast-gate, test-air-line.
25. Air cylinder, stack, blast-gate.
26. Orifice, test, air-line.
27. Plenum, test.
28. Test filter.
29. Test filter, clamp.
30. Roller conveyor.
31. Air cylinder, test-filter, clamp.
32. Pilot lights, ready, GO, NO-GO.
33. Meter scale, microammeter.
34. Knob, fine-gain.
35. Switch, indicator-selector.
36. Switch, indicator-power.
37. Knob, stray-light, compensation.
38. Indicator unit, percent-penetration.
39. Knob, coarse-gain.
40. Knob, meter-zero.
41. Jack, external-meter.
42. Valve, Owl.
43. Owl.
44. Valve, scattering-chamber.
45. Selector valve, 4-way.
46. Push buttons, motor-blower, START and STOP.
47. Pilot light, immersion-heater, ON.
48. Push buttons, air-cylinder, operate and release.
49. Pilot lights, heater-circuit.
50. Variac 1, fin-heaters, hot-air, bay-2.
51. Variac 2, fin-heaters, hot-air, bay-3.
52. Variac 3, generator-jacket-heater, DOP.
53. Variac 4, fin-heaters, quenching-air, bay-4.
54. Draft gage, testing-orifice.
55. Draft gage, test-plenum.
56. Draft gage, scattering-chamber.
57. Draft gage, blower-intake.
58. Draft gage, preheater.
59. Draft gage, quenching-air.
60. Draft gage, main-duct, diluent-air.
61. Eyepiece, Owl.
62. Polaroid lens, adjustable.
63. Scale, Owl.
64. Split polaroid lens.
65. Lamp, Owl.
66. Orifice, sampling-air.
67. Photo cell.
68. Scattering chamber.
69. Lamp, scattering-chamber.
70. Light filter, perforated-plate.
71. Solenoid, light-filter.
72. Microswitch, light-filter.
73. Microswitch, air-cylinder, clamp-closed.
74. Valve, air-electromagnetic.
75. Knob, selector-valve.
76. Air filter, Chemical-Corps.
77. Thermometer, hot-air-line.
78. Thermometer, DOP-reservoir.
79. Thermometer, quenching-air.
80. Switch, toggle, manual-automatic.
81. Microswitch, air-cylinder, clamp-open.
82. Microswitch, Owl.
83. Switches, disconnect.
84. Thermostat, adjustable, hot-air, bay-1.
85. Pressure gage, air-cylinders.
86. Transition piece, sampling.
87. Switch panel.
    a. Circuit 1—115-volt, percent-penetration-meter.
    b. Circuit 2—115-volt, scattering-chamber, light- and filter-solenoid.
    c. Circuit 3—115-volt, Owl-light.
    d. Circuit 4—115-volt, vacuum-pump.
    e. Circuit 5—115-volt, thermoregulator and immersion-heaters.
    f. Circuit 6—115-volt, Electroaire valves.
    g. Circuit 7—230-volt, variac 4 and heaters, bay-4.
    h. Circuit 8—230-volt, coil on main contactor, heater and equipment, master-switch.
    i. Circuit 9—230-volt, variac 3 and generator-jacket-heater.
    j. Circuit 10—230-volt, variac 2 and heaters, bay-3.
    k. Circuit 11—230-volt, variac 1 and heater, bay-2.
    l. Circuit 12—230-volt, thermostat and heater, bay-1.
    m. Starter, motor-blower.
    n. Starter, reset-button.
88. Needle valve.
89. Release valve.

Legend—Figure 9

Method 105.11
ROUGH HANDLING OF PARTICULATE FILTERS, ADSORBENT UNITS, COLLECTIVE PROTECTORS, AND SIMILAR ITEMS

The application of this test method will not be restricted to one particular apparatus.

1. SCOPE

1.1 This test method is intended for use in subjecting particulate filters, gas filters and similar items to the rough handling required by applicable specifications.

2. APPARATUS

2.1 The apparatus shall consist of a vibrating machine that has been fitted with a steel movable plate and holding clamps. This plate shall measure 30 by 30 inches and have a total weight of 240 ± 20 pounds including the holding clamps.

2.2 A steel base–plate shall be part of the apparatus and shall be firmly anchored to a concrete floor suitable to absorb the necessary impact of the vertical vibrations.

3. PROCEDURE

3.1 Position and clamp the filter on the steel movable plate in accordance with the applicable end item specification and or test procedure so that there shall be no distortion to the frame or body of the filter when it is securely clamped in place.

3.2 The steel movable plate and filter shall be raised and let fall (free) by gravity 3/4 ± 1/8 inch, unless otherwise directed in the specification on the filter under test, onto the steel base–plate at the rate of 200 drops per minute for 15 ± 0.1 minutes.

3.3 The test shall be performed at a room temperature of 70° ± 25°F.

4. NOTES

4.1 Approved safety procedures shall be observed while performing tests.

4.2 Throughout the test the filter shall remain in a firm position.

4.3 Filters may be padded or blocked where clamps press against the side or top of the frame, but not the bottom, to prevent distortion of the filters.

4.4 The movable steel plate must be parallel to the base–plate at all times (thereby eliminating any horizontal movement and or force).

4.5 A vibrating machine capable of meeting these requirements is located at Edgewood Research Development and Engineering Center.

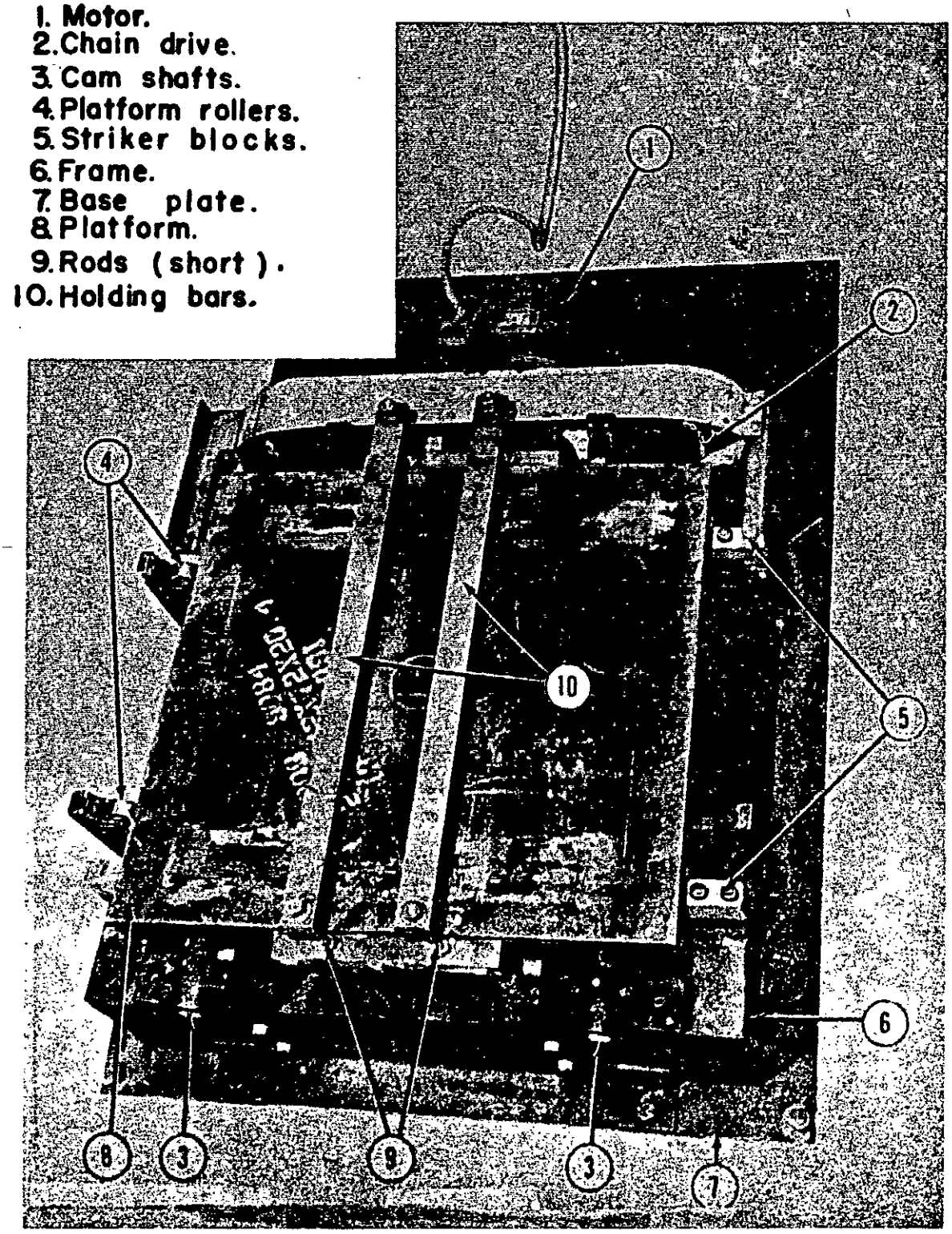

Figure 10. Vibrating machine, E7.

Method 204.1.2
MUSTARD RESISTANCE OF IMPERMEABLE MATERIALS (STATIC–DIFFUSION METHOD)

1. SCOPE

1.1 This method describes a static diffusion method for determining the mustard resistance of impermeable materials. Mustard resistance, when measured by this method, is the time for sufficient mustard to pass through the material, vaporize, and cause a "vapor break" as indicated on the indicator paper. It is not the time for the liquid film to pass through the material. (See Method 207.1).

2. OUTLINE OF METHOD

2.1 The test is conducted by placing a specified quantity of liquid mustard (HD) on the top surface of the material, which rests on standard congo red indicator paper. When mustard permeates the test material, it evaporates and the vapors react with S–328 (tetrachloro–7, 8–diphenylglycoluril) that has been spotted on the paper, producing hydrogen chloride (HCl) that reacts with the impregnant congo red, changing it to a blue color. The time required for sufficient mustard to pass through the test material and effect the color change in the indicator paper is the mustard resistance of the material.

3. APPARATUS

3.1 The apparatus, Q170 (see Figure 11), used in an oven thermostatted at 37° ± 0.5°C, containing a heater, circulating fan or fans, charcoal filter bed, drawers to hold glass trays of test specimens, and mirrors to view the undersides of the specimen trays. The specimen trays are made of glass plates that permit seeing the detector paper under the mounted specimens when viewed through the mirror, which is mounted at an appropriate angle underneath the trays. A glass window in the front wall of the oven allows the mirror to be seen. The drawers can be pulled part way out or completely removed to allow the trays of specimens to be placed on the drawers. The bottoms of the drawers are open so that the specimens can be seen through the glass trays. If the drawers are to be removed, dummy fronts can be inserted into the openings to maintain the internal temperature. The dimensions of the oven and the number of drawers can be tailored to fir the available hood space. The heater and thermostat are designed to maintain the internal temperature at 37° ± 0.5°C, with a relatively fast rise without overshooting the required temperature. The fan, or fans, circulate the air under the trays, through an opening at the end of the trays, across the top of the trays, and through a charcoal filter to the underside. The air circulation is required to maintain a uniform temperature, but the velocity is low enough not to disturb the specimens on the trays. The charcoal filter serves to adsorb any mustard vapor that might escape from the specimens. The filter is made of loose charcoal spread in a tray whose bottom is made of wire screen; a cloth scrim may be laid in the tray to prevent fines from passing through. The walls of the apparatus should be insulated to prevent heat loss.

4. PREPARATION FOR TEST

4.1 Indicator paper. (See 7.3)

4.1.1 S–328 solution. Mix 0.5 gm of S–328 (tetrachloro–7, 8–diphenylglycoluril) and approximately 0.1 gm of anhydrous sodium or potassium carbonate with 10 mL of 1,1,2,2–tetrachloroethane. Shake the mixture thoroughly and filter through a No. 42 filter paper. Pour the clear filtrate into a small actinic glass bottle. The bottle should be kept closed at all times when not in use. A fresh solution should be prepared weekly.

4.1.2 Impregnating. Dip 4.25–cm circles of filter paper conforming to type I, class 1 or 2, of

UU–P–236 into approximately 0.1 percent solution of congo red in distilled water. When the paper is thoroughly impregnated, allow to air dry. The treated paper may be kept indefinitely but must be prepared and stored in an acid–free and mustard–free atmosphere.

4.1.3 Spotting. Spot the impregnated paper with the S–328 solution as follows: Dip a cotton swab or similar tool into the S–328 solution and then touch the swab to the congo red impregnated paper. Make one spot at the center of the paper and four others about it at a distance of approximately 1/4–inch. Lets the spots dry. The spotted paper is defective after 24 hours and should be used preferably before 12 hours have elapsed. If the test specimen runs more than 24 hours, the indicator paper should be changed at the end of the 24–hour period. Examine the dried spots before use; if a discoloration, even a faint one, appears, it is likely the S–328 solution is defective and should be remade before continuing with the test.

4.2 Apparatus. Turn on the fan and temperature controller. The temperature must be maintained at 37° ± 0.5°C, measured on the glass plate on which the specimens are placed. To simulate total mass that must be maintained at this temperature during the test, lay two glass plates in each tray, one to represent the cover glasses, and adjust the controller settings until the temperature can be maintained. These settings should be adequate for the duration of the test. If the apparatus is used on a daily basis, it is best to leave the power on at all times to maintain the temperature. If a temperature other than 37° ± 0.5°C is indicated bring to the correct temperature by adjusting the controller. If a variable temperature is found in the apparatus check the temperature regulating system for defects.

4.3 Test specimens.

4.3.1 Cutting specimens. Cut the required number of disks or swatches from the material to be tested. The specimens should be slightly larger than the rings used to mount them (see 4.3.2).

4.3.2 Mounting specimens. Place the specimens on a smooth, flat surface. Attach a ring that is impervious to mustard to the specimen and press firmly until it is securely set, providing an airtight seal between specimen and ring. A suitable method is as follows: Melt equal parts beeswax and crystalline paraffin wax. Immerse felt rings into the melt until the rings are saturated with wax. Remove a ring from the melt with tongs, allow excess liquid wax to drain, and place the ring on the specimen. Place a weight on the ring to hold it in place until the wax cools and the ring is firmly attached to the specimen. Do not allow any wax to coat the specimen inside the ring. The ring should have a 3/4 to 1–inch inside diameter and be approximately 1/4–inch high.

5. PROCEDURE

5.1 Preconditioning of specimens. Place disks of the spotted indicator paper (spotted side down) on a glass plate. Place the mounted specimens on the indicator–paper disks, with the specimen contacting the paper. Place the glass plate, with specimens and indicator paper into a clean oven at 37°C for enough time to allow them to attain 37°C. Also place glass cover plates into the oven for preconditioning at 37°C.

5.2 Testing. Set the preconditioned glass plate and specimens on a platform heated to 37°C in front of the testing apparatus. Using a suitable dropper, such as a Pasteur pipet, place approximately 0.150 gm (about four drops) of distilled liquid mustard (HD) of at least 95–percent purity on each specimen, inside the attached ring. Cover each specimen with a glass cover plate (see Figure 12). Open the drawer, place the glass plate on the drawer support and push in the drawer. Observe the indicator paper by means of the mirror inside the apparatus; a portable light may used to illuminate the indicator paper.

The end of the test occurs when the first visible blue color appears where the paper was spotted. If the blue color first appears at the outer edge of the spots and moves inward, suspect a false break from vapors inside the apparatus instead of from agent permeation through the specimen. The time interval between the instant the mustard is placed on the specimen and the first visible appearance of blue on the spotted portion of the indicator paper is termed the mustard resistance of the material.

5.3 Decontamination. After the test is completed, clean the equipment for reuse by following standing operating procedures that are in effect at the facility performing the testing. It is necessary that all items contaminated with mustard be thoroughly decontaminated, and the reusable items, such as glass plates and cover glasses, be decontaminated and cleaned to the extent that there is no residual mustard that might affect personnel or the indicator paper used in subsequent testing.

6. QUALITY CONTROL

6.1 Standard reference material.

6.1.1 For each type of material test using this method, a standard reference material (SRM) should be made available for the laboratory to use a means of quality control of within day and between day variation. The SRM should simulate the sample material to be tested as closely as possible with respect to formulation and ideally break after the sample material. A sufficient volume of any lot of an SRM should be available to allow the laboratory to test SRM samples on successive days to establish a data base, a statistical quality control chart with control limits and, thereafter, to test the SRM during each test of sample materials for a period of at least six months. A minimum of two SRM samples should be tested each time and results plotted on control charts with established quality control limits. If these limits are breached, sample data should be considered invalid and the test repeated after the cause of excess variation is identified and corrected; a contingency plan for such situations should be documented and made available for laboratory personnel conducting the test. These procedures apply only to those materials for which an SRM is available.

6.1.2 SRMs should also be used for proficiency testing of contract laboratories during their pre–certification process and for continuing certification to conduct this test.

6.2 Blank. In addition to the SRM, a blank must be tested with each sample batch, the blank being a sample carried through the entire test without mustard being added. The purpose of the blank is to determine if any chemicals emanate from the sample material during the test and cause a positive reaction with the S–328, give the blue color and, therefore, act as a false positive.

7. NOTES

7.1 Mustard produces severe blister action in both the liquid and vapor phases. All mustard containers should be kept in a well ventilated hood when not in use. Great care should be exercised to prevent either the liquid mustard or its vapor from coming in contact with the body.

7.2 Personnel should wear butyl rubber gloves in all operations involving the handling of mustard. The glove protocol in effect for the standing operating procedures being used should be strictly observed.

7.3 If the material tested contains a compound that reacts with S–328, a false end point is obtained. Protective dubbing is an example of such a material. Thus, leather impregnites, such as dubbing, cannot be tested for mustard resistance using S–328–spotted congo red paper and watching for the blue spots to appear. The mustard resistance of materials such as dubbing impregnated leather may be measured by using DB–3 indicator paper in

place of the S–328–spotted congo red paper.

7.4 If the services of a contracted commercial laboratory are to be procured for performance of this test method, certification of such laboratory must be initiated and maintained by the government during the contractual period. As a source of technical expertise regarding this test method, the government certifying body is to utilize the services of the government laboratory responsible for the routine performance of this test method for production acceptance testing purposes. The government laboratory is to provide the contract laboratory the current standing operating procedures for conduct of this test method, necessary apparatus, SRM, if available, and supplies of necessary reagent solutions and materials. If SRMs are available, the government laboratory is to test and evaluate the proficiency of the contract laboratory to conduct this test method before contract work starts and periodically during the contract. Contract work is not to be performed unless the contractor can demonstrate quality control in the laboratory using SRMs and proficiency in the performance of this test method.

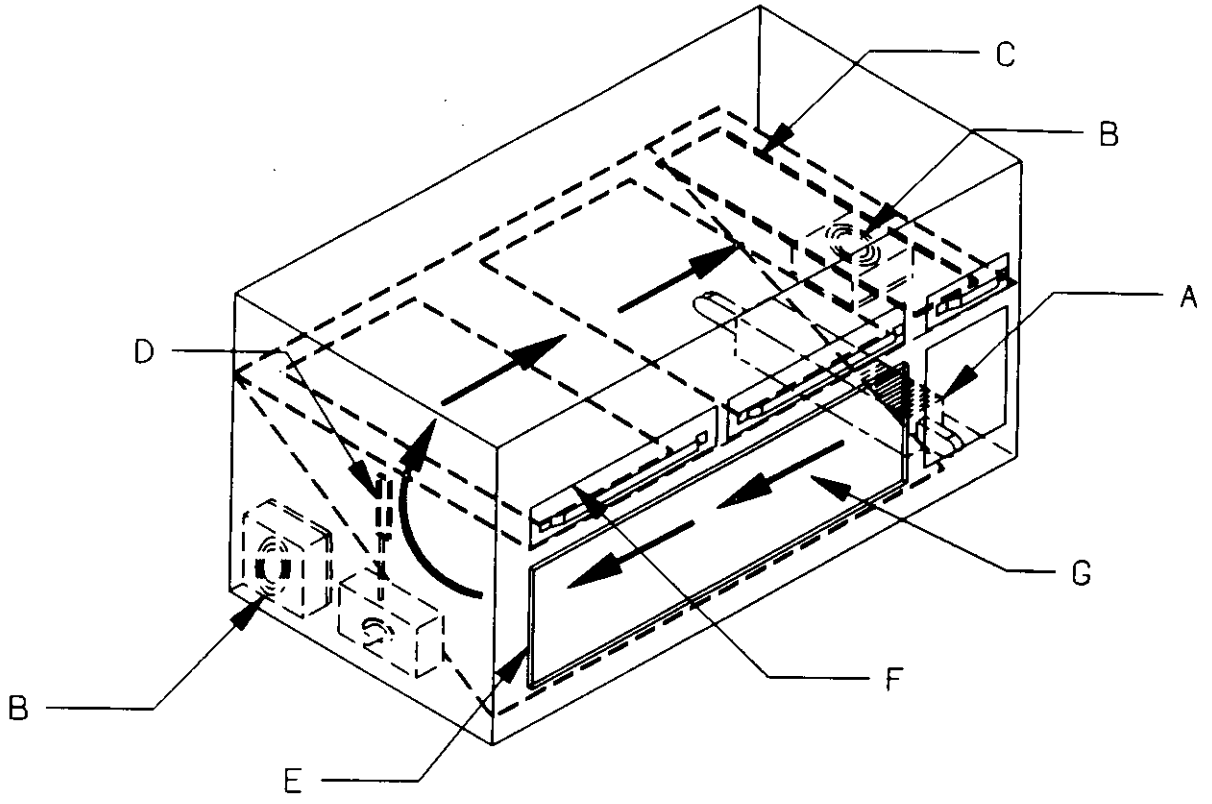

A. Heating element
B. Fans
C. Bed of Charcoal
D. Themoregulator
E. Mirror
F. Drawers (each holds 20 samples)
G. Window

Figure 11. Static-diffusion apparatus.

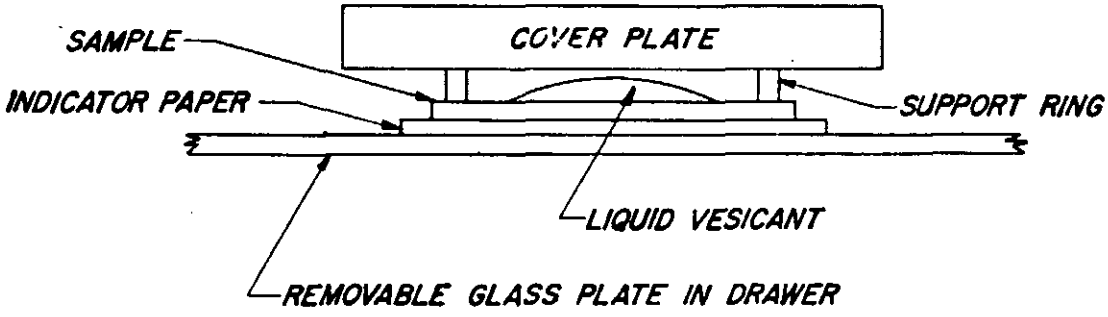

Figure 12. Specimen arrangement, static-diffusion test.

Method 209.1
MUSTARD RESISTANCE OF IMPERMEABLE MATERIALS (STATIC-DIFFUSION METHOD)

This test method is in addition to Test Method 204.1.2 MUSTARD RESISTANCE OF IMPERMEABLE MATERIALS (STATIC-DIFFUSION METHOD).

The application of this test method will not be restricted to one particular apparatus.

1. SCOPE

1.1 This method describes a static diffusion method for determining the mustard resistance of impermeable materials as required by applicable specifications.

2. PRECAUTIONS

2.1 Since mustard is extremely toxic in both the liquid and vapor phases, tests using this agent shall be conducted only in testing facilities meeting safety requirements for the handling of mustard as presented in AMCR 385-31.

3. PROCEDURE

3.1 Place sample horizontally in a suitable container that provides an air chamber above the sample and another below it. The upper chamber shall be small enough to preclude significant evaporation. Provide ports for allowing room air to be drawn across the underside of the sample. Cover a known area of at least 20 cm^2 of the top surface of the sample with distilled liquid mustard of 95-percent or greater purity. Draw air across the bottom of the sample and continuously analyze the effluent for agent. Record the time at the moment agent is placed upon the sample and the time a cumulative amount of agent of 4 γ/cm^2 is measured in the effluent. The test shall be carried out at 22° ± 2°C. The analyzer shall be capable of measuring a permeation ratio of at least 0.5 γ/cm^2 per minute. The differential pressure across the sample during the test shall not exceed 0.01 atmosphere.

Method 205
VX RESISTANCE OF IMPERMEABLE MATERIALS (STATIC–DIFFUSION METHOD)

1. SCOPE

1.1 This method describes a static diffusion method for determining the liquid VX resistance of impermeable materials. VX resistance, when measured by this method, is the time for sufficient liquid VX to pass through the material and cause a color change on the indicator paper.

2. OUTLINE OF METHOD

2.1 The test is conducted by placing a specified quantity of VX on the top surface of the material, which rests on standard ABC–M8 or M9 indicator paper. When VX permeates the test material, the liquid reacts with the dyes in the indicator paper changing it to a green (M8) or red (M9) color. The time required for sufficient VX to pass through the test material and effect the color change in the indicator paper is the VX resistance of the material.

3. APPARATUS

3.1 The apparatus, Q170 (see Figure 11), used is an oven thermostatted at 37° ± 0.5°C, containing a heater, circulating fan or fans, charcoal filter bed, drawers to hold glass trays of test specimens, and mirrors to view the undersides of the specimen trays. The specimen trays are made of glass plates that permit seeing the detector paper under the mounted specimens when viewed through the mirror, which is mounted at an appropriate angle underneath the trays. A glass window in the front wall of the oven allows the mirror to be seen. The drawers can be pulled part way out or completely removed to allow the trays of specimens to be placed on the drawers. The bottoms of the drawers are open so that the specimens can be seen through the glass trays. If the drawers are to be removed, dummy fronts can be inserted into the openings to maintain the internal temperature. The dimensions of the oven and the number of drawers can be tailored to fit the available hood space. The heater and thermostat are designed to maintain the internal temperature at 37° ± 0.5°C, with a relatively fast rise without overshooting the required temperature. The fan, or fans, circulate the air under the trays, through an opening at the end of the trays, across the top of the trays, and through a charcoal filter to the underside. The air circulation is required to maintain a uniform temperature, but the velocity is low enough not to disturb the specimens on the trays. The charcoal filter serves to adsorb any vapor that might escape from the specimens. The filter is made of loose charcoal spread in a tray whose bottom is made of wire screen; a cloth scrim may be laid in the tray to prevent fines from passing through. The walls of the apparatus should be insulated to prevent heat loss.

4. PREPARATION FOR TEST

4.1 Indicator paper. Cut M8 or M9 indicator paper to proper size for placement under the specimens to be tested.

4.2 Apparatus. Turn on the fan and temperature controller. The temperature must be maintained at 37° ± 0.5°C, measured on the glass plate on which the specimens are placed. To simulate total mass that must be maintained at this temperature during the test, lay two glass plates in each tray, one to represent the cover glasses, and adjust the controller settings until the temperature can be maintained. These settings should be adequate for the duration of the test. If the apparatus is used on a daily basis, it is best to leave the power on at all times to maintain the temperature. If a temperature other than 37° ± 0.5°C is indicated bring to the correct temperature by adjusting the controller. If a variable

temperature is found in the apparatus check the temperature regulating system for defects.

4.3 Test specimens.

4.3.1 Cutting specimens. Cut the required number of disks or swatches from the material to be tested. The specimens should be slightly larger than the rings used to mount them (see 4.3.2).

4.3.2 Mounting specimens. Place the specimens on a smooth, flat surface. Attach a ring that is impervious to VX to the specimen and press firmly until it is securely set, providing an airtight seal between specimen and ring. A suitable method is as follows: Melt equal parts beeswax and crystalline paraffin wax. Immerse felt rings into the melt until the rings are saturated with wax. Remove a ring from the melt with tongs, allow excess liquid wax to drain, and place the ring on the specimen. Place a weight on the ring to hold it in place until the wax cools and the ring is firmly attached to the specimen. Do not allow any wax to coat the specimen inside the ring. The ring should have a 3/4 to 1–inch inside diameter and be approximately 1/4–inch high.

5. PROCEDURE

5.1 Preconditioning of specimens. Place disks of the spotted indicator paper (spotted side down) on a glass plate. Place the mounted specimens on the indicator–paper disks, with the specimen contacting the paper. Place the glass plate, with specimens and indicator paper into a clean oven at 37°C for enough time to allow them to attain 37°C. Also place glass cover plates into the oven for preconditioning at 37°C.

5.2 Testing. Set the preconditioned glass plate and specimens on a platform heated to 37°C in front of the testing apparatus. Using a suitable dropper, such as a Pasteur pipet, place approximately 0.150 gm (about four drops) of liquid VX of at least 95–percent purity on each specimen, inside the attached ring. Cover each specimen with a glass cover plate (see Figure 12). Open the drawer, place the glass plate on the drawer support and push in the drawer. Observe the indicator paper by means of the mirror inside the apparatus; a portable light may used to illuminate the indicator paper. The end of the test occurs when the first visible color appears where the paper was spotted; VX causes a green color on M8 paper and a red color on M9 paper. The time interval between the instant the VX is placed on the specimen and the first visible appearance of green or red on the indicator paper is termed the VX resistance of the material.

5.3 Decontamination. After the test is completed, clean the equipment for reuse by following standing operating procedures that are in effect at the facility performing the testing. It is necessary that all items contaminated with VX be thoroughly decontaminated, and the reusable items, such as glass plates and cover glasses, be decontaminated and cleaned to the extent that there is no residual VX that might affect personnel or the indicator paper used in subsequent testing.

6. QUALITY CONTROL

6.1 Standard reference material.

6.1.1 For each type of material test using this method, a standard reference material (SRM) should be made available for the laboratory to use a means of quality control of within day and between day variation. The SRM should simulate the sample material to be tested as closely as possible with respect to formulation and ideally break after the sample material. A sufficient volume of any lot of an SRM should be available to allow the laboratory to test SRM samples on successive days to establish a data base, a statistical quality control chart with control limits and, thereafter, to test the SRM during each test of sample materials for a period of at least six months. A minimum of two SRM samples should

be tested each time and results plotted on control charts with established quality control limits. If these limits are breached, sample data should be considered invalid and the test repeated after the cause of excess variation is identified and corrected; a contingency plan for such situations should be documented and made available for laboratory personnel conducting the test. These procedures apply only to those materials for which an SRM is available.

6.1.2 SRMs should also be used for proficiency testing of contract laboratories during their pre–certification process and for continuing certification to conduct this test.

6.2 Blank. In addition to the SRM, a blank must be tested with each sample batch, the blank being a sample carried through the entire test without VX being added. The purpose of the blank is to determine if any chemicals emanate from the sample material during the test and cause a positive reaction with the indicator paper and, therefore, act as a false positive.

7. NOTES

7.1 VX is a nerve agent of extremely low vapor pressure. All containers should be kept closed in a well ventilated hood when not in use. Great care must be exercised to prevent liquid VX from coming in contact with the body.

7.2 Personnel should wear butyl rubber gloves in all operations involving the handling of VX. The glove protocol in effect for the standing operating procedures being used should be strictly observed.

7.3 If the services of a contracted commercial laboratory are to be procured for performance of this test method, certification of such laboratory must be initiated and maintained by the government during the contractual period. As a source of technical expertise regarding this test method, the government certifying body is to utilize the services of the government laboratory responsible for the routine performance of this test method for production acceptance testing purposes. The government laboratory is to provide the contract laboratory the current standing operating procedures for conduct of this test method, necessary apparatus, SRM, if available, and supplies of necessary reagent solutions and materials. If SRMs are available, the government laboratory is to test and evaluate the proficiency of the contract laboratory to conduct this test method before contract work starts and periodically during the contract. Contract work is not to be performed unless the contractor can demonstrate quality control in the laboratory using SRMs and proficiency in the performance of this test method.

Method 206.1.3
GB RESISTANCE OF IMPERMEABLE MATERIALS (STATIC–DIFFUSION METHOD)

1. SCOPE

1.1 This method describes a static diffusion method for determining the GB vapor resistance of impermeable materials.

2. PRECAUTIONS

2.1 Since GB is extremely toxic in both the liquid and vapor phases, tests using this agent shall be conducted only in testing facilities governed by safety regulations for the handling of GB and the treatment of casualties produced by this substance.

3. OUTLINE OF METHOD

3.1 The test is conducted by placing approximately 0.1 gm of liquid GB on the top surface of the material to be tested. The disk is sealed between two glass cups and the bottom cup contains approximately 20 fruit flies (see 7.1). The time, in minutes, required for the GB to permeate the test material and cause paralysis or death of one–half of the flies is the GB vapor resistance of the material.

4. APPARATUS

4.1 Assembly. The assembly of the apparatus is shown in Figure 13.

4.2 Glass cups. The glass cups have ground–glass–faced flanges approximately 2–1/8 inches in diameter.

4.3 Test temperature. The test shall be conducted at 25° ± 2°C. Since the test apparatus is mounted in a fume hood, the room temperature must be maintained at the specified test temperature. If the temperature cannot be controlled, a constant temperature box must be provided.

5. PROCEDURE

5.1 Preparation of test specimens. Die or cut the required number of disks from the sample, approximately 2–1/4 inches in diameter.

5.2 Mounting test specimens. Mount each test specimen between two glass cups as follows: Preheat required number of glass cups on a temperature controlled hot plate (100° – 105°C). Lay the specimen on a clean, hard, flat surface. Touch the heated ground–glass–face of a cup flange to the surface of a wax application tray (WAT) consisting of equal parts of beeswax and crystalline paraffin wax, so that the ground–glass–face is covered with wax. Press cup to specimen surface and allow wax to harden. Invert cup; repeat the waxing procedure with the second cup and press it firmly onto the surface of the specimen, ensuring that the specimen is held symmetrically between the cups as indicated on Figure 13. Hold the cup assembly with the ground joint of the frosted cup on the lip of the wax pot. Rotate the assembly so that the edge of the flange is immersed in the melted wax and will be coated with wax to ensure an airtight seal between the specimen and the cups.

5.3 Use of fruit flies. See 7.1 for suggestions on raising and maintaining a colony of fruit flies. Use adult flies for the test that have emerged from the pupal state at least 3 to 5 days previous to the test. To facilitate transfer of the flies into the lower cup of the Q171 test apparatus (see Figure 13), proceed as follows: Transfer the flies from breeding bottles to a transfer bottle (all bottles approximately 1/2–pint) by setting the empty transfer bottle on a firm surface with the open mouth upward. Tap the bottom of a breeding bottle on a rubber pad to cause the flies to fall to the bottom of the bottle. Quickly remove the stopper from the breeding

bottle and invert the breeding bottle onto the empty transfer bottle. Grasp the necks of the two bottles, tap the transfer bottle on the rubber pad until the flies have been shaken into the transfer bottle. Set the transfer bottle on a firm surface, lift the breeding bottle and quickly cover the transfer bottle with a thin flat metal plate approximately 4 inches square. Insert the stopper back into the mouth of the breeding bottle. Take another breeding bottle, tap the bottom on the rubber pad, remove the stopper and invert the breeding bottle onto the metal plate covering the transfer bottle. Pull out the metal plate, allowing the mouth of the breeder bottle to cover the mouth of the transfer bottle, and shake the flies down into the transfer bottle as before. (This technique prevents the escape of the flies during the transfer.) Continue this procedure until the bulk of the flies is 1/4 to 3/8 inch deep in the transfer bottle. If the bulk of the flies is greater than 3/8 inch deep, transpiration of water vapor from the flies will cause fogging on the glass walls of the bottle, with loss of flies when they stick to the wet surface. When sufficient flies have been transferred, hold the metal plate and tap the bottle to keep the flies on the bottom. Quickly remove the metal plate and insert a rubber stopper into the mouth of the transfer bottle. This rubber stopper has a 1/4–inch Teflon tube inserted through a hole in the stopper just to the bottom. Plug this tube with a cotton swab to prevent escape of flies. To transfer the flies from the bottle to the Q171 test apparatus, remove the swab, insert the tube into the opening of the cup that will house the flies and gently tap the stopper against the cup until about 20 flies have been transferred. Remove the transfer bottle to the next test cup and quickly insert a porous plug into the first test cup opening. Continue until all test cups have been inoculated with flies. The Q171 test apparatus should be supported in a device that holds the bottom cup upwards to enable receiving the flies from the transfer bottle; the flies are introduced into the cup that contains the side of the specimen opposite to the side intended to be challenged with the GB.

5.4 Addition of GB. Support the Q171 test apparatus in a device that holds the bottom cup downwards to enable addition of GB to the top cup (the flies are now in the bottom cup). With a dropping device, such as Pasteur piper, transfer 3 drops (approximately 0.1 gm) of liquid GB having a minimum purity of 95–percent onto the center of the specimen. Immediately place a glass stopper in the opening of the top cup. Note the time when the GB is placed upon the specimen. Set the Q171 test apparatus, with flies and GB, on the rack provided in the hood. Observe the apparatus until half the flies show no motion. It may be necessary to jog the apparatus to ascertain that the flies are indeed motionless. The time in minutes elapsed from initial contact of the GB with the specimen until half the flies are completely paralyzed is the GB resistance of the test material.

5.5 Blank. Since the test flies are quite sensitive to the environment, it is necessary that a blank be run concurrently with each set of determinations. Prepare and run the blank in the same manner as the resistance test units, except place no GB on the specimen.

6. DECONTAMINATION

6.1 After the test is completed, clean and decontaminate the test equipment according to the method prescribed in the standing operating procedures being used.

7. NOTES

7.1 The insect species used in this test is Drosophila melanogaster, which can be obtained from biological supply establishments (i.e. Carolina Biological Supply Co, Burlington, NC) in the form of culture vials. Directions for rearing flies are furnished by these establishments. The following procedures have been found satisfactory for rearing

fruit flies, but are not mandatory. The following formula is sufficient for about 30 1/2–pint bottles.

Distilled water	2000 mL
Karo syrup (corn syrup)	270 mL
Cornmeal (white and yellow)	200 gm
Agar	30 gm

Pour one liter of distilled water into a 4–quart container and heat to boiling. Measure syrup into a 500–mL beaker and dilute with distilled water to 500 mL; pour it into the boiling water. Use some of the boiling water to wash the syrup residue from the beaker, then use some of the rest of the cold water to remove all traces of syrup from the beaker. Weigh the cornmeal (1 part yellow, 1 part white) and the agar into a 1000–mL beaker and mix well. Add cold water and stir. Remove some of the boiling syrup–water mixture and add it to the cornmeal slurry. Add the slurry to the boiling syrup–water mixture over a period of 15 seconds. Rinse the beaker and add the remainder of the water and rinsate to the boiling mixture. Gently boil for 10 minutes. Pour the cooked media into each bottle to a level of 32 mm. Let the bottles cool. When the bottles feel just warm to the touch, add one small cake of fresh yeast (in date, with no mold spots); alternatively, just prior to use, add 1/4–teaspoon of dry yeast to cover surface. To provide more area for fly pupae, a strip of folded paper or mesh may be added to the bottle. The prepared bottles of media can be stored up to 2 weeks in a refrigerator; in this case do not add the yeast until ready to start a colony. Bring the temperature of the media to room temperature before use. Alternatively, Instant Drosophila Medium, Formula 4–25, can be used. To start a colony, add some flies to prepared breeding bottles and insert porous plugs into the mouths. The plugs must be made of a material that is harmless to flies. Mark the bottles with the date that the flies are added. Start as many breeding bottles as the workload requires. Start new breeding bottles every day in order that the supply of flies for tests will be adequate. Place the breeding bottles into an incubator (20° – 25°C) for 14 days. At 21°C, a fresh culture will produce new adults in 2 weeks: 8 days in the egg and larval stages, and 6 days in the pupal stage. Higher temperatures will accelerate the life cycle of the flies. The adult fruit flies may live for several weeks. The day after the egg is laid, the larva hatches. The larva molts twice; after the second molt the cuticle hardens and darkens to become the pupa. The pupa begins to darken just prior to the emergence of an adult fly. When the fly emerges, it is light in color, the wings are unexpanded, and the abdomen is long. In a few hours the wings expand, the abdomen becomes more rotund, and the color gradually darkens. A female can start laying eggs 2 days after emerging. After maturity, flies are fertile as long as they live. Flies should be at least 3 days old before they are used in this test. Do not use flies from bottles that are 30 or more days old. Bottles to be used for raising flies should be thoroughly cleaned and washed in hot soapy water. After rinsing to remove all traces of soap, dry the bottles, preferably in an oven. Sterilize the bottles under ultraviolet light to kill all mold spores and other parasites. If mold grows in a breeding bottle, destroy the entire contents, since flies can carry mold from one bottle to another. Mold can deplete an entire colony of flies and great pain must be taken to avoid contamination by molds or other parasites.

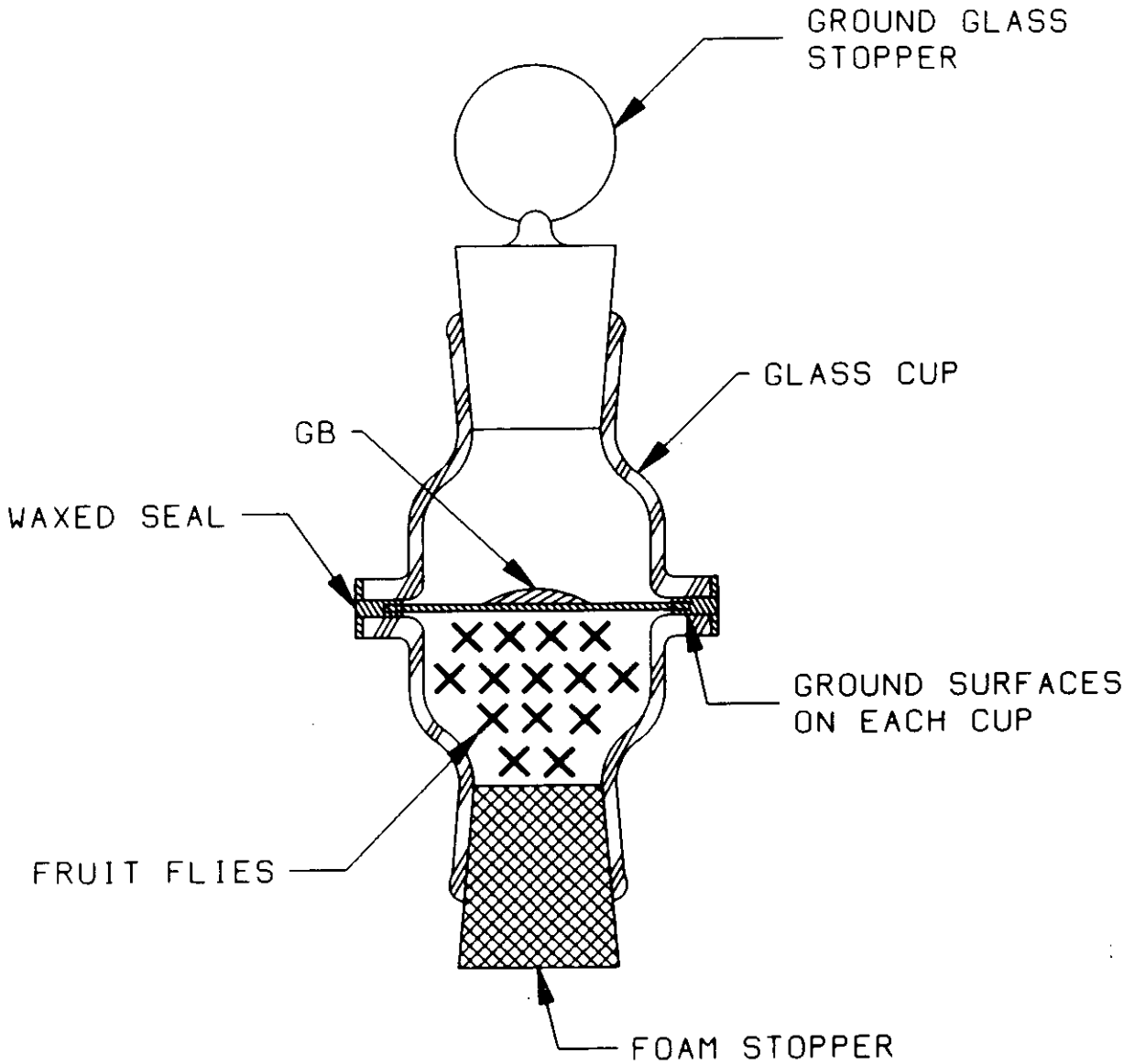

Figure 13. Arrangement for static-diffusion test.

Method 208.1
GB RESISTANCE OF IMPERMEABLE MATERIALS (STATIC–DIFFUSION METHOD)

This test method is in addition to Test Method 206.1.3 GB RESISTANCE OF IMPERMEABLE MATERIALS (STATIC–DIFFUSION METHOD).

The application of this test method will not be restricted to one particular apparatus.

1. SCOPE

1.1 This method describes a static diffusion method for determining the GB resistance of impermeable materials as required by applicable specifications.

2. PRECAUTIONS

2.1 Since GB is extremely toxic in both the liquid and vapor phases, tests using this agent shall be conducted only in testing facilities meeting safety requirements for the handling of GB as presented in AMCR 385–102.

3. PROCEDURE

3.1 Place sample horizontally in a suitable container that provides an air chamber above the sample and another below it. The upper chamber shall be small enough to preclude significant evaporation. Provide ports for allowing room air to be drawn across the underside of the sample. Cover a known area of at least 20 cm^2 of the top surface of the sample with stabilized GB of 90–percent or greater purity. Draw air across the bottom of the sample and continuously analyze the effluent for agent. Record the time at the moment agent is placed upon the sample and the time a cumulative amount of agent of 1.25 γ/cm^2 is measured in the effluent. The test shall be carried out at 22° ± 2°C. The analyzer shall be capable of measuring a permeation ratio of at least 0.14 γ/cm^2 per minute. The differential pressure across the sample during the test shall not exceed 0.01 atmosphere.

LIQUID-VESICANT RESISTANCE OF IMPERMEABLE MATERIALS (STATIC-DIFFUSION METHOD)

1. SCOPE

1.1 This method describes a static-diffusion method for determining the liquid-GB and liquid-mustard resistance of impermeable materials.

2. OUTLINE OF METHOD

2.1 The test is conducted by placing a specified quantity of liquid vesicant on the top surface of the test material which rests on standard indicator paper. The time required for sufficient liquid to pass through the test material and effect the color change in the indicator paper is the liquid-vesicant resistance of the material.

3. APPARATUS

3.1 The apparatus employed in the test is illustrated in figure 11. A 9-inch diameter fan, 1600-r.p.m., with 1/20-hp. motor, mounted in a bulkhead blows air through a 250-watt heater and a cooling coil. Cold water may be run through the cooling coil; the heater operates intermittently to keep the air at 37° ± 0.5°C. The fan circulates air through the large part of the box and the end drawer which contains the test samples, over the sample space and through a bed of charcoal in a tray located over the fan compartment. The charcoal bed is approximately one-quarter of an inch deep and serves to remove vesicant vapor picked up by the air while passing over the test units. The neon-glow lamp indicates when current is passing through the heater. The apparatus should be maintained in a chemical fume hood.

4. PREPARATION FOR TEST

4.1 **Indicator paper.** Use 2-inch squares of liquid-vesicant-detector paper, M6, conforming to Specification JAN–P–253.

4.2 **Apparatus.** Turn on the fan and temperature elements in the box. The temperature of the box must be maintained at 37° ± 0.5°C. Place a thermometer on each of the removable glass plates in the drawers of the box. If a temperature other than 37° ± 5°C. is indicated, bring to the correct temperature by adjusting the thermoregulator. If a variable temperature is found in the box, check the temperature regulating system for defects. Make sure the charcoal is in the bed at the end of the box. The charcoal should be replaced at monthly intervals when in daily use or whenever the odor of mustard becomes apparent.

4.3 **Test samples.**

4.3.1 *Cutting samples.* Cut out two disks or squares from the material to be tested. The specimens should be slightly larger than the rings used to mount them. (See 4.3.2.)

4.3.2 *Mounting samples.* Place the specimen on a smooth, flat surface. Attach a ring of bakelite coated fiberboard or other suitable material, which is nonabsorbent and impervious to the vesicant, to the specimen using any paste, cement, melted wax, etc. which is appropriate for the type of material being tested. The ring should be ¾ to 1 inch inside diameter and approximately ½ inch high. Press down firmly until the joint has set, providing an airtight seal between specimen and ring. (See 6.3.)

5. PROCEDURE

5.1 **Placing specimens in apparatus.** Place 2-inch squares of indicator paper (olive-drab side up) on the removable glass-trays in the apparatus. Place the test specimens on the indicator papers and cover the rings with transparent plastic disks, approximately ⅛-

inch thick and slightly larger than the ring. Push the drawers in and allow the glass and specimens to reach approximately 30°C.

5.2 **Testing.** Pull out the drawers, lift off the plastic disks, and place on each specimen approximately 0.150 gm. (approximately four drops) of liquid vesicant of at least 95 percent purity. (See 6.1 and 6.2.) Recover each sample with the plastic disks and push in the drawers. Inspect the indicator paper at ½-hour intervals by lifting the test specimen off the paper with tongs. The end point is reached when the first visible red color appears on the paper. The time interval between the instant the vesicant is placed on the specimen and the first inspection period when a red color is noted on the indicator paper is termed the liquid-vesicant resistance of the material. (See 6.4.)

5.3 **Decontamination.** After the test is completed, clean the equipment for reuse as follows: Remove the glass trays containing the specimens and place them under a ventilated hood. Remove the test samples and indicator paper, using tongs, and place them in a waxed cardboard container which should be burned as soon as practicable in a safe place. Alternatively decontaminate in a bath of concentrated nitric acid for mustard or 15 percent sodium hydroxide for GB. Then place the material in a waxed cardboard container for disposal. Clean mustard-contaminated glass trays by placing in boiling hot water, under the hood, for at least one-half hour, then wash in running hot water and dry. Place GB-contaminated trays in caustic solution for at least 10 minutes, then wash in running hot water and dry.

6. NOTES

6.1 Handling vesicants in either the liquid or the vapor phase is extremely hazardous. All vesicant containers should be kept in a well ventilated hood when not in use. Great care should be exercised to prevent either the liquid or vapor from coming in contact with the body.

6.2 Personnel should wear M3 protective impermeable gloves in all operations involving the handling of vesicants. The rubber gloves should be decontaminated after each use: for GB, use a caustic wash and water rinse; for mustard, dip in a solution of RH-195 in acetone and hang in hood to dry. Gloves used with mustard should be thoroughly decontaminated after every five washings by placing them in a 5 percent solution of sodium carbonate at 100°C. for one-half hour. Gloves should be thoroughly decontaminated immediately upon any known contamination. After removal of the gloves, the hands should be washed with soap and cool water. In case of accidental contamination of the skin with mustard, the hands may be dipped in a solution of RH-195 in acetone, or the solution may be applied to the affected area with a cotton swab.

6.3 After mounting, cellophane and some paper specimens should be conditioned in a stream of air at 65 percent relative humidity, for a period of 48 hours at 20° to 30°C. The relative humidity over saturated sodium nitrite solution has been found to give satisfactory results in this temperature range. Nonhygroscopic samples may be tested as received.

6.4 In determining resistance to liquid vesicants, care should be taken to distinguish between an overall change of the M6 indicator paper to a dull red, and the appearance of bright orange-red spots. The appearance of spots is indicative of a liquid break, whereas the general color change may indicate a high vapor concentration.

DOP-SMOKE PENETRATION OF GAS-MASK CANISTERS

1. SCOPE

1.1. This method describes the operating procedure for the E27 DOP-smoke-penetration meter in evaluating the smoke penetration of the M11 and ND–C–1 canisters.

2. OUTLINE OF METHOD

2.1 Clean, dry air at 7 p.s.i. gage is divided into two streams; one stream (vapor) flows at 20 liters per minute through a preheater, then into the smoke generator over the surface of liquid DOP (dioctyl phthalate) which is maintained at 172° ± 0.1°C., while the other stream (diluent) bypasses the smoke generator at 80 liters per minute. The mixing of the streams forms a liquid smoke, the particle size of which is controlled by adjusting the temperature of the diluent air stream. The smoke then flows to the stabilization chamber where it is aged.

2.2 During the test, the smoke is drawn by vacuum with a head of 127 mm. (5 inches) of mercury from the stabilization chamber. It enters the test fixture at a rate of 32 liters per minute for the M11 canister and 16 liters per minute for the ND–C–1 canister. The smoke that passes through the test filter is measured by the percent-penetration indicator.

2.3 The particle size of the smoke is determined by passing a sample of the smoke through the smoke-particle-size indicator and noting the degree of polarization of a scattered light beam.

3. APPARATUS

3.1 The apparatus used for the test is shown in figure 14. Figures 14 to 24 show separate views of the apparatus. All parts used during the operation of the machine are designated by number. Numbers in parentheses used in this method refer to the parts shown on figures. (See legend.)

4. REAGENTS AND MATERIALS

4.1 **Dioctyl phthalate (DOP).** The dioctyl phthalate (di-2-ethylhexyl-phthalate) of Union Carbide and Carbon Corporation, sold under the trade name "Flexol" plasticizer DOP is used in the smoke-generator unit. Any equivalent grade of DOP may be used.

5. PREPARATION OF APPARATUS

5.1 **General.** The preparation of E27 smoke-penetration meter for operation consists of opening air, water, and vacuum lines, warming up electrical heaters and equipment, and calibrating the electronic testing units.

5.2 **Primary operation.** (See figures 15, 16, and 17.)

5.2.1 Open completely air-intake valve (1) and water-drain valve (3). Open water-intake valve (2) slightly until the gage mark on valve (2) is opposite pointer. Adjust pressure regulator (64) by means of handle at top until pressure gage (65) registers 7 p.s.i. Adjust pressure regulator (60) by handle at top until gage (61) registers 20 p.s.i.

5.2.2 Adjust vacuum-control valve (5) until the top of the float in vacuum flowmeter (10)

is even with the line designating 32 liters per minute. Adjust diluent-control valve (6) until the top of the float in diluent flowmeter (9) is even with the line designating 10 liters per minute. Adjust vapor-control valve (7) until the top of the float in vapor flowmeter (8) is even with the line designating 20 liters per minute.

5.2.3 Throw on disconnect switch (21). Push START button of master switch (15). Set the jacket-and-air-heater control (13) to 50 (or the setting found satisfactory during previous operation).

5.2.4 Turn the warmup timer (12) to 10 minutes. After the warmup pilot light (18) has shut off, turn on power switch (26) on the smoke-particle-size indicator and power switch (37) on the percent-penetration indicator. Approximately 15 minutes additional time will be required for the DOP to warm up to normal operating temperature. Arrival at operating temperature is indicated by the liquid-heater pilot light (17) changing from ON to OFF. If, at the end of 30 minutes, the penetration meter has not reached operating temperature, the warmup time should be increased by not more than 2 minutes the next time the machine is started. A thermal cut-off is located on the upper right wall inside the main junction box (66). This cut-off is set at 5°C. above the operating temperature of the DOP in the generator chamber. If the power shuts off, the penetration meter has overheated and must cool down before operations may resume. The penetration meter must be restarted manually by pushing START button (15).

Note. Do not use warmup timer again unless the unit has completely cooled down.

Should cut-off occur during the warmup period, the warmup time should be decreased approximately 2 minutes when starting the machine the following day.

5.2.5 Adjust the setting of the jacket-and-air-heater control (13)

Note. Adjustment of either 20 liters per minute flow or 80 liters per minute flow will affect the other; therefore, final settings must be made by alternate adjustments of the two valves so that the liquid-heater indicator lights (17) will flash on and off at approximately equal intervals. If the liquid-heater-on pilot light remains lighted for a longer period than the off indicator, the jacket-and-air-heater control should be turned to a slightly higher reading (by not more than one scale division at a time). Wait several minutes for the temperature to stabilize itself before further adjustment. If the liquid-heater-on pilot light remains lighted for a shorter period than the off light, the jacket-and-air-heater control should be turned to a slightly lower reading (by not more than one scale division at a time). Once the correct setting is obtained, the jacket-and-air-heater control should be maintained at this value unless the light alternation changes.

5.2.6 Open flushing air valve (56) until a positive flow of air, as felt by hand, escapes from the lower jaw of chuck (57).

5.3 Adjustment of particle-size indicator after operating temperature has been reached. (See figures 14, 19, 20 and 23.)

5.3.1 In subsequent operations where adjustment of control units is obtained by bringing meter (35) to the zero position, the following steps are necessary. Throw meter-sensitivity switch (32) to the LOW position. After preliminary adjustment of control units, bring the needle of meter (35) to within 1° of the zero position. Then throw switch (32) to HIGH position and continue to bring the meter to the zero position. These steps are necessary whenever directions call for setting the meter to the zero position.

5.3.2 Throw meter-sensitivity switch (32) to low position. See that the standard lamp (49) is in the UP position (do not remove from housing) and standard lamp switch (30) is off. Throw cell-lamp switch (28) on. Remove the smoke tube (marked with a red ring) from the inlet port (51). Turn knob of calibrate switch (36) to position G. Adjust meter-zero knob (34) to bring needle of meter (35) to zero. Turn analyzer (47) on mechanical-analyzer unit until a reading

of 45° is obtained on the righthand vernier scale (48).

5.3.3 Open top lid of patricle-size indicator unit and locate screw adjustments (R16) and (R20) which are the coarse-gain controls of knobs A and B (33). Turn both (R16) and (R20) with a screwdriver counterclockwise as far as possible. Set knobs A and B of gain control (33) so that both indicator arrows are in an upright position.

5.3.4 Turn calibrate switch (36) to A position. Turn knobs A and B of stray-light control (31) so that both indicator arrows are upright. Turn screw adjustment (R23) (coarse gain of stray-light control A) with a screwdriver to bring meter (35) to zero. Set calibrate switch (36) to B position and set meter to zero by adjusting (R26) (coarse gain of stray-light control B) using above method.

5.3.5 Turn total-gain knob (27) fully counterclockwise. Rotate total-gain knob (27) clockwise until the needle on meter (35) stops moving in one direction. The needle will move to a maximum deflection in one direction and then stop or move back in the opposite direction. Leave total-gain knob (27) at the position of maximum deflection. If the needle tends to go off scale during this operation turn knob B of stray-light control (31) to bring the needle back on scale. Then continue turning the total gain (27) until the maximum deflection is obtained. Any future adjustments of total gain (27) that may be necessary should be made by turning the knob between the above found setting and the fully counterclockwise position.

5.3.6 Repeat step 5.3.4 after the total-gain control (27) has been set. Then close the top lid of indicator unit. Further adjustments of stray-light controls will be made with A and B stray-light controls (31).

5.3.6.1 Check positions G, A, and B of calibrate switch (36) for meter zero. Adjust with meter-zero control (34) stray-light A (31) and stray-light B (31) respectively, if necessary.

5.3.6.2 Turn calibrate switch to N.

5.3.6.3 Move meter-sensitivity switch (32) to LOW.

5.3.6.4 Set vernier scale (48) on mechanical analyzer to 0° with analyzer knob.

5.3.6.5 Place smoke hose back on inlet port (51). Note reading of meter (35) carefully.

5.3.6.6 Remove smoke hose from inlet port (51). Allow a few seconds for the vacuum to draw out the smoke.

5.3.6.7 Turn cell-lamp switch (28) off. Push standard lamp (49) to its DOWN position. Turn standard-lamp switch (30) on.

5.3.6.8 Adjust intensity knob (29) until the reading on meter (35) corresponds to the meter reading noted in step 5.3.6.5.

5.3.6.9 Set vernier scale (48) back to 45°. If meter (35) is off the zero position, make half of the adjustment with gain control A (33) and half with gain control B (33) to reset meter to zero. Switch to high-meter sensitivity, and continue to zero meter with gain controls A and B (33).

5.3.6.10 Turn standard-lamp switch (30) off. Pull standard lamp (49) to UP. Turn cell-lamp switch (28) on.

5.3.7 Repeat calibration process from steps 5.3.6.1 to 5.3.7.

5.3.8 Repeat step 5.3.6.1. If more than minor adjustments are necessary with A and B knobs of stray-light control (31) repeat all steps from that point to 5.3.7. If only minor adjustments are necessary the particle-size indicator is ready for operation.

5.3.9 Place the smoke hose back on inlet port (51).

5.3.10 Turn analyzer knob (47) to bring meter (35) to zero position. The angular reading on vernier scale (48) corresponds to the DOP particle size.

5.4 Maintaining proper smoke-particle size.

5.4.1 The correct particle size corresponds to an angular reading of 29° on the vernier scale (48). Particle size is controlled by the temperature of the diluent-air stream which is varied by means of the particle-size control (11). Decreased readings on the scale of this control will decrease the temperature and thus decrease the particle size and angular readings on the vernier scale. The reverse is true of increased scale reading. If a change in the control setting is required to correct the particle size, move the control in the desired direction by no more than one scale division at a time, and wait several minutes for the smoke to stabilize itself. Once the correct position of the particle-size control is determined, the control should be maintained at this value. Particle size is also affected to a lesser degree by the rate of flow of the air stream. Therefore, the vapor and diluent flowmeters (8) and (9) should be checked occasionally for proper settings as indicated in 5.2.2.

5.5 Adjustment of percent-penetration indicator. (See figures 14, 15, 20, 21 and 24.)

5.5.1 Turn the red knobs of meter (41) so that both red contact needles are off scale. Turn cell lamp (16) to ON position.

5.5.2 Turn the selector switch (43)to meter-zero position. Adjust the meter-zero-control knob (40) to bring the needle of meter (41) to zero position. Switch selector (43) to 0.1 percent. Adjust meter (41) to zero with stray-light-compensation control (38). Turn selector switch (43) to the 100 percent position. Close chuck (57) by pushing both buttons on the CHUCK CLOSE switch (20) simultaneously. Adjust meter to a scale setting of 100 with coarse- and fine-gain controls (39) and (42). Readjust meter-zero and stray-light controls.

Note. Never close chuck unless selector switch (43) is at the 100 percent position, or unless a filter unit is in the chuck. The phototube in photocell housing (54) wil be seriously damaged if the light filter (55) is not in the down position when unfiltered smoke is drawn through the chuck. The light filter decreases the intensity of the light falling on the phototube. It is lowered into place automatically in the 100 percent position of selector switch (43).

5.5.2.1 Open the chuck by pressing chuck-release button (14).

5.5.2.2 Repeat the procedures specified in 5.5.2 and 5.5.2.1.

5.5.3 The calibrate and read-volts positions of selector switch (43) are for maintenance purposes only. In the calibrate position, the meter (41) should read approximately full scale. The meter should read approximately 50 to 90 in the read-volts position.

5.5.4 The penetration of smoke through the canisters to be tested varies with the rate of flow of smoke through the chuck. Since this flow is entirely dependent on the vacuum system, vacuum flowmeter (10) should be checked occasionally to see that it maintains its correct value.

5.5.5 Step 5.5.2 for the calibration of the percent-penetration meter should be repeated hourly.

6. OPERATION. (See figures 14, 15, 18, and 21.)

6.1 Set the left red pointer of meter (41) to the zero position or slightly more until READY light (46) goes on. Set the right red pointer to the maximum value of smoke penetration allowed for the canister being tested. Switch selector (43) to 0.1 percent position.

6.2 Recheck that the lights of liquid-heater indicator (17) flash on and off at equal intervals. Make necessary changes if the interval is not correct. (See 5.2.5.) Check and adjust flowmeters (8), (9), and (10).

6.3 Insert the canister to be tested in the lower jaw of chuck (57) with the intake port (small hole) facing up. When the chuck is closed, there will be an initial surge of the meter that will carry the needle against the right hand red pointer, lighting the NO-GO

bulb (44) as the READY light is extinguished. If the canister is acceptable, the needle will drop down to indicate numerically the percent penetration; and the light will change from NO-GO to GO (45). Should the needle stay against the pointer after the initial surge, and the NO-GO light remains on, the canister is rejected. However, it should be rechecked by opening the chuck and reseating the canister in the lower chuck jaw before repeating the above test.

7. SHUTDOWN

7.1 Set meter-sensitivity switch (32) to LOW position.

7.2 Turn off the power switch (26), and cell-lamp switch on the particle-size indicator. Turn off power switch (37) on the percent-penetration indicator and cell lamp (16) on the front panel. Then throw the disconnect switch (21) off.

7.3 Set selector switch (43) to meter-zero position. Never leave selector (43) on calibrate position. (A dry-cell battery is in the circuit in the calibrate position. Excessive drain on the battery will render it useless in a short time.)

7.4 Remove smoke hose from inlet port (51).

7.5 Wait several minutes for the system to be flushed with air then shut off air-intake valve (1) water-intake valve (2) and water-drain valve (3).

7.6 Shut off vacuum-control valve (5) last.

8. NOTES ON MAINTENANCE

8.1 Check the DOP level and fill through filling cock (25) to the cold level shown on the indicator card of liquid-level indicator (24). This should be done before starting the machine.

8.1.1 Drain (by opening valve (4)) and replace DOP at least once every month.

8.2 Blow out the upper and lower jaws of the chuck daily with compressed air.

8.3 Drain air-line filters (62) and (63) twice weekly by opening drain cocks located at the bottom of the filters. This operation should be done with air pressure on.

8.3.1 The screens inside the air-line filters (62) and (63) should be cleaned once a month. Turn off the air-intake valve (1) unscrew the plugs on top of the filters and lift out the screens.

8.4 Oil (SAE No. 10) should be added to lubricater (59) weekly.

8.5 If the percent-penetration indicator is replaced by a spare unit, the scattering chamber should also be replaced by its corresponding spare scattering chamber. These units are calibrated together. Inaccurate penetration readings will result if they are not kept together.

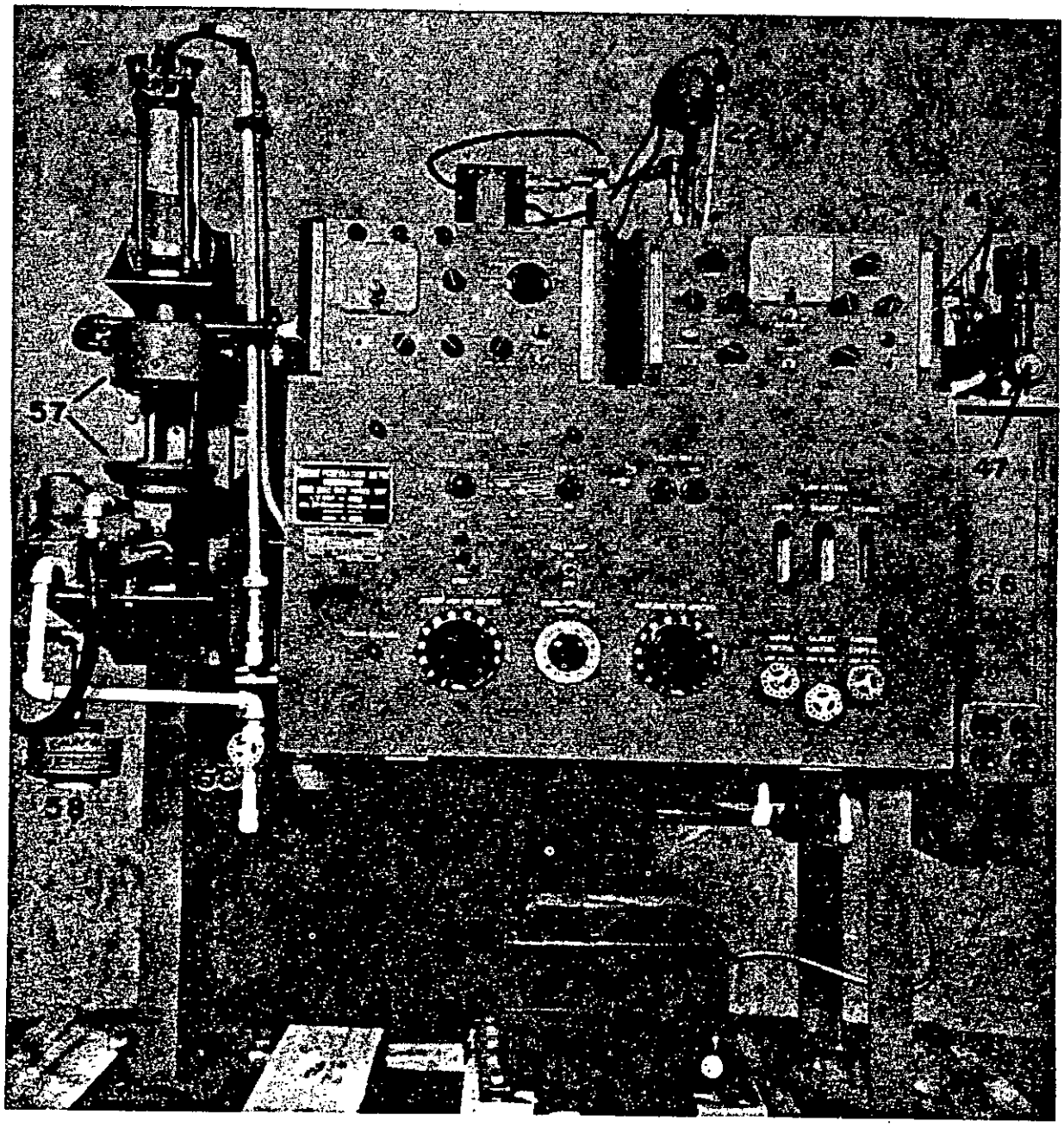

Figure 14. Smoke-penetration meter, E27, front view.

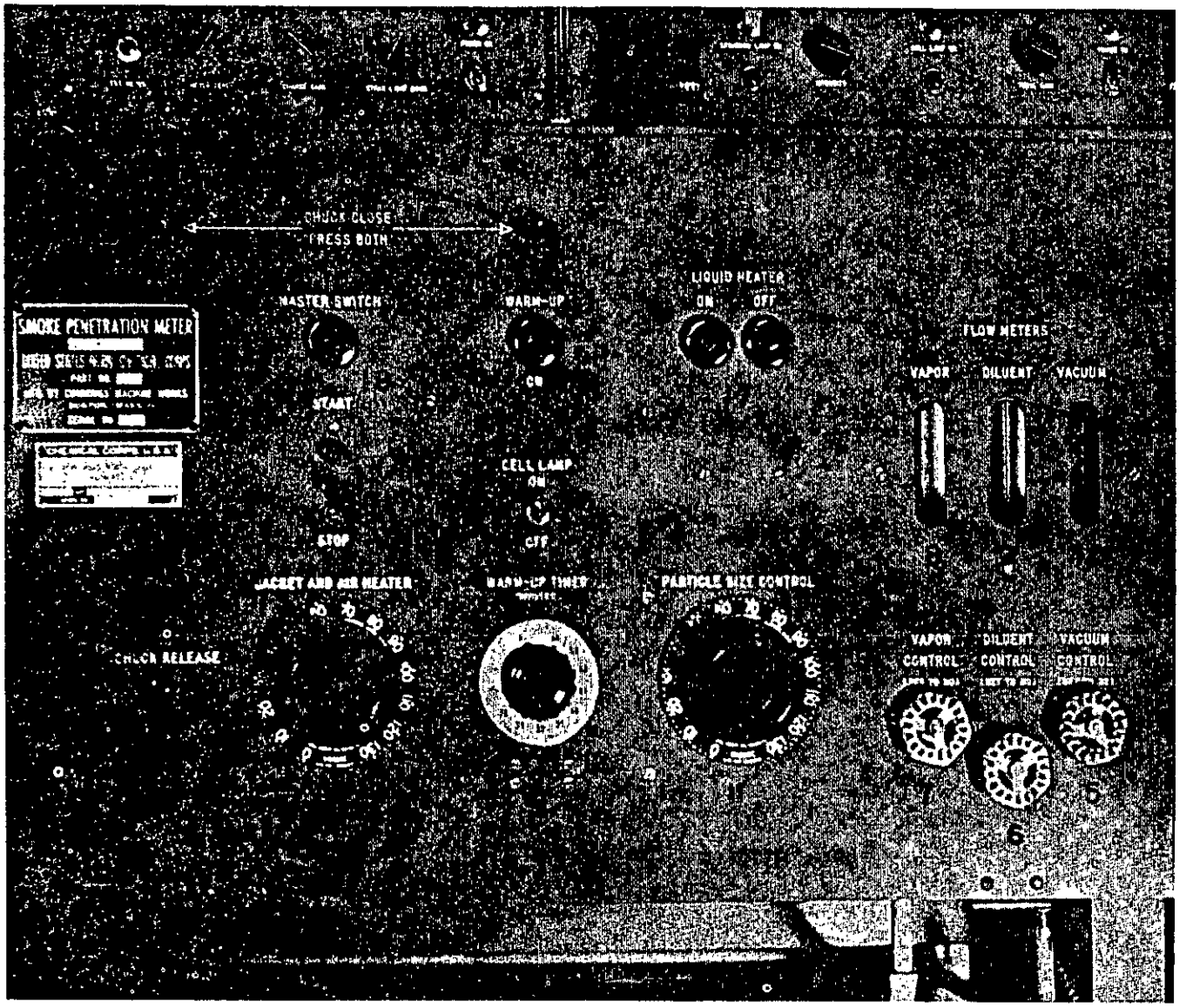

Figure 15. Smoke-penetration meter, E27, control panel.

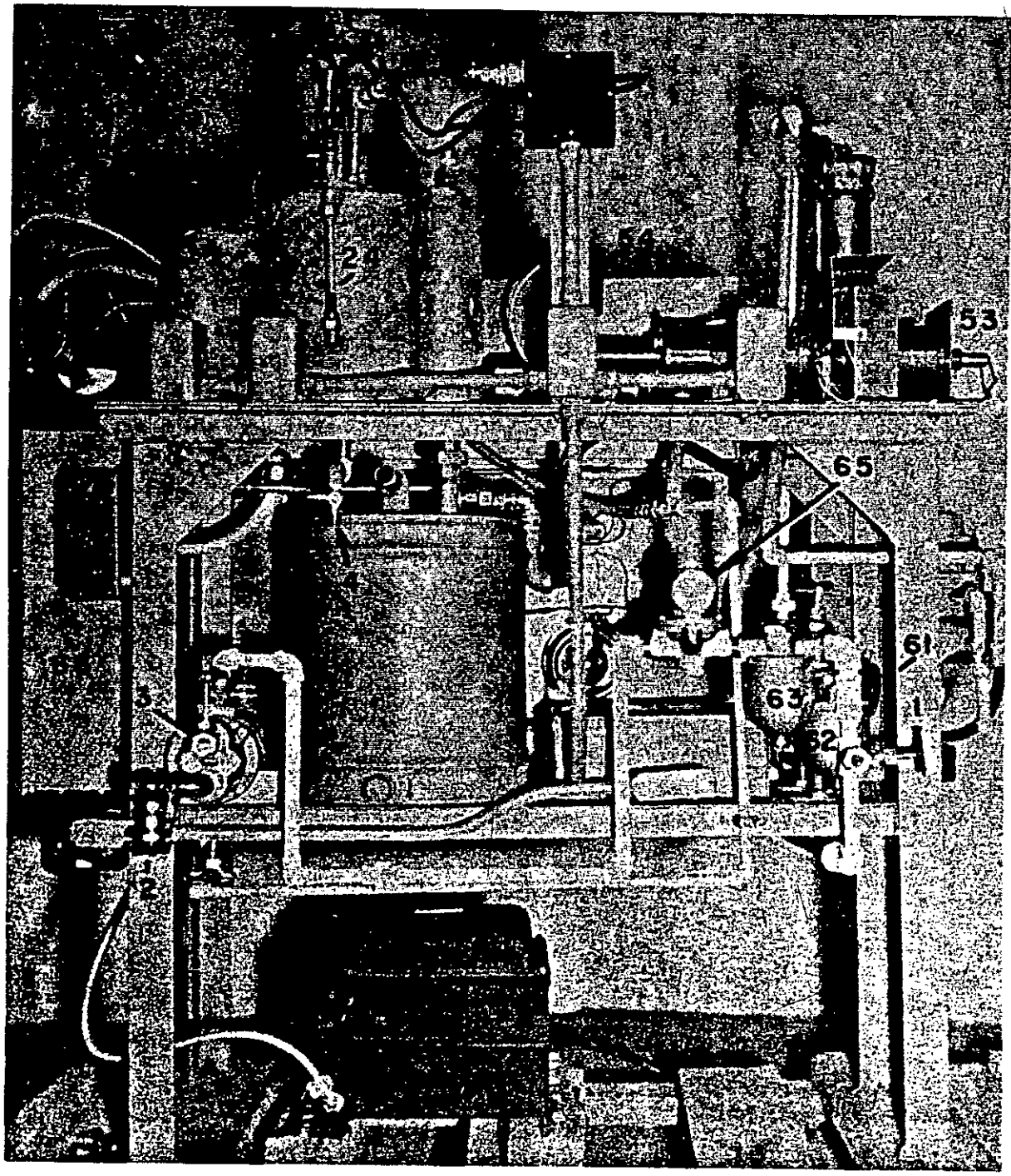

Figure 16. Smoke-penetration meter, E27, rear view.

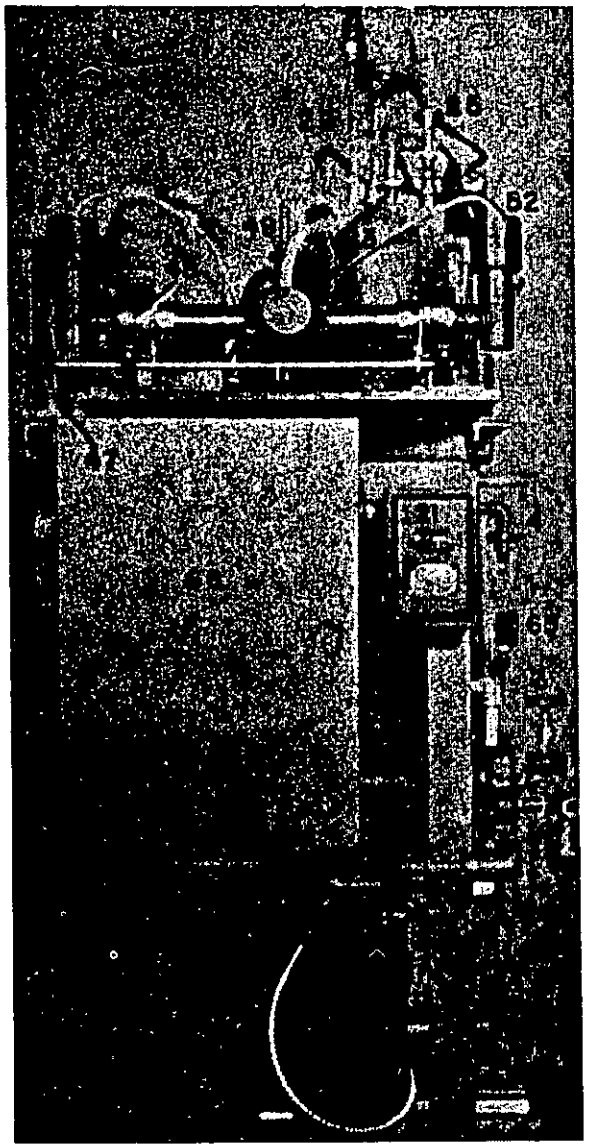

Figure 17. Smoke-penetration meter, E27, right-side view.

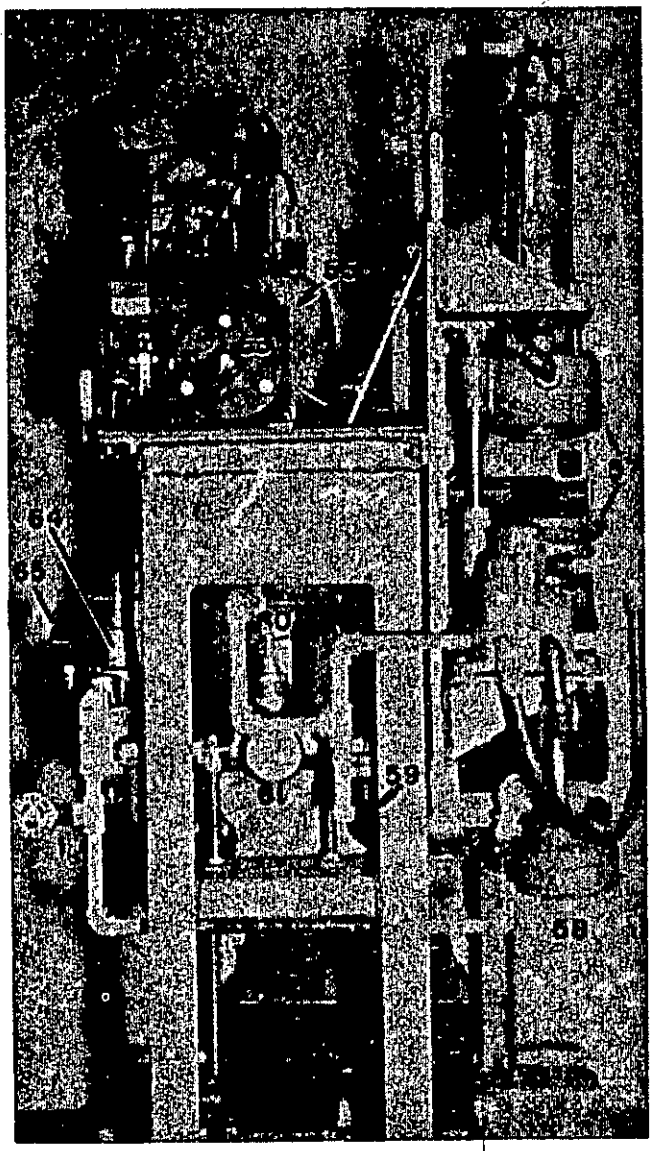

Figure 18. Smoke-penetration meter, E27, left-side view.

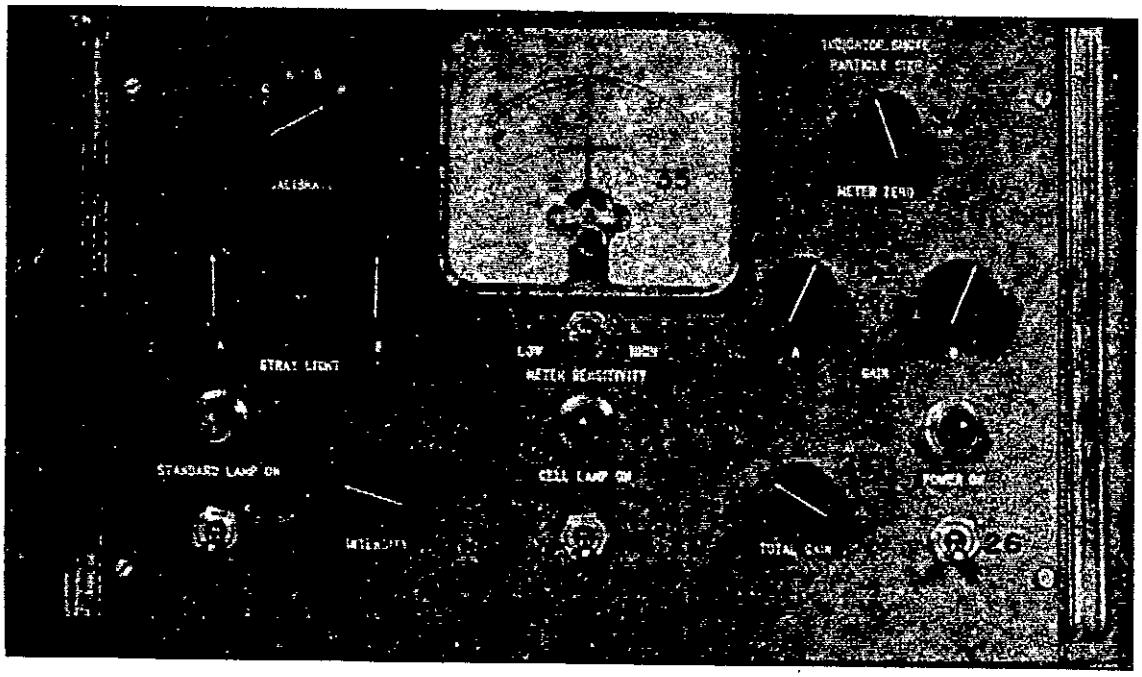

Figure 19. Smoke-particle-size indicator, front panel.

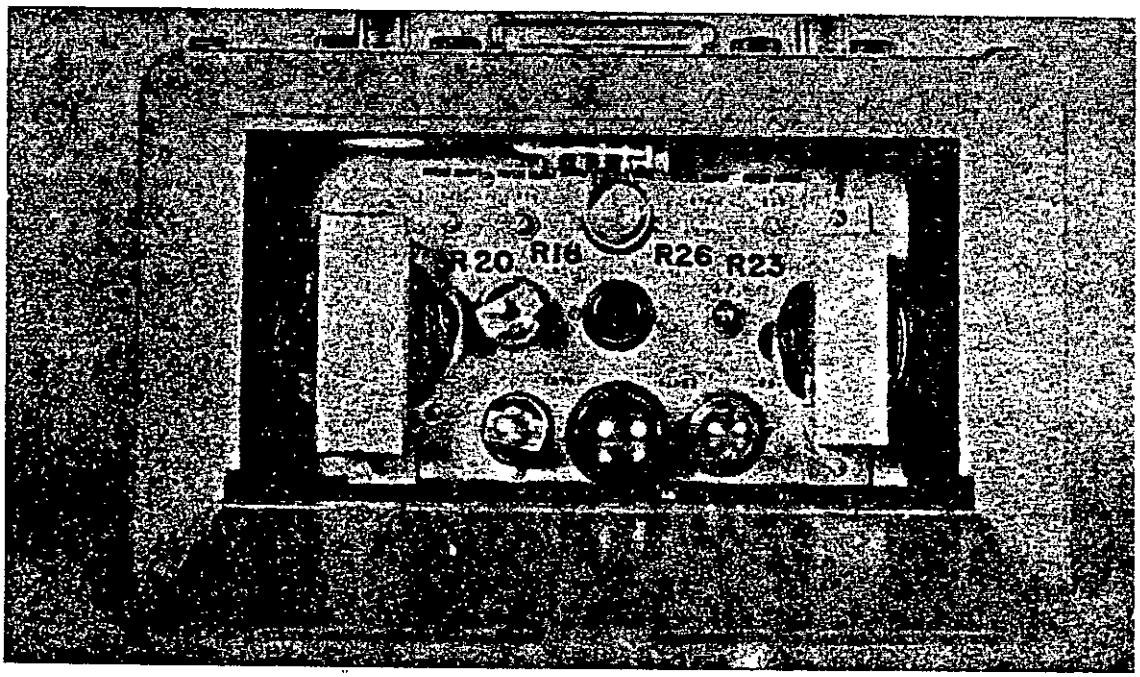

Figure 20. Smoke-particle-size indicator, top view.

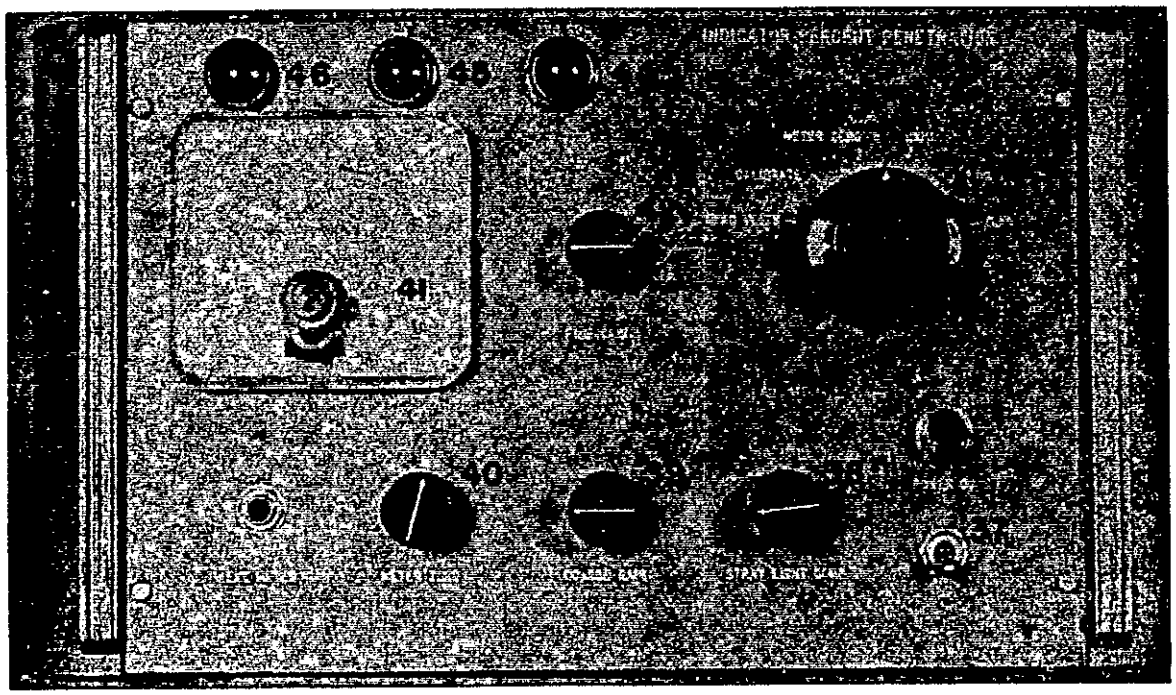

Figure 21. Percent-penetration indicator, front panel.

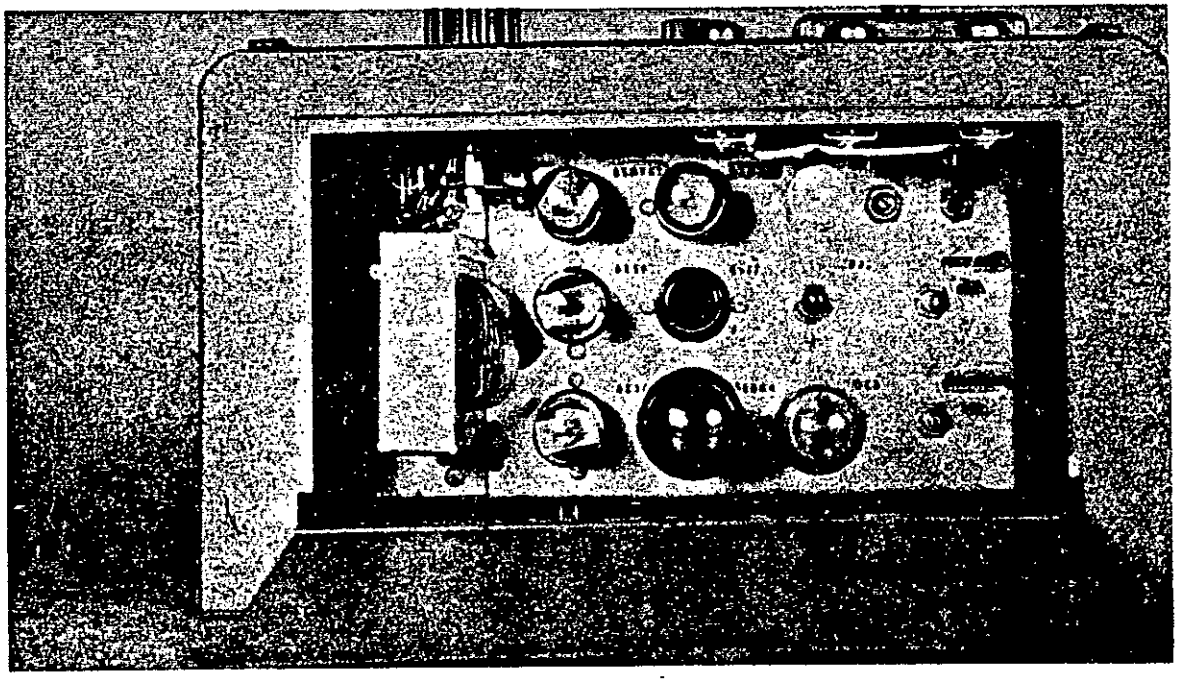

Figure 22. Percent-penetration indicator, top view.

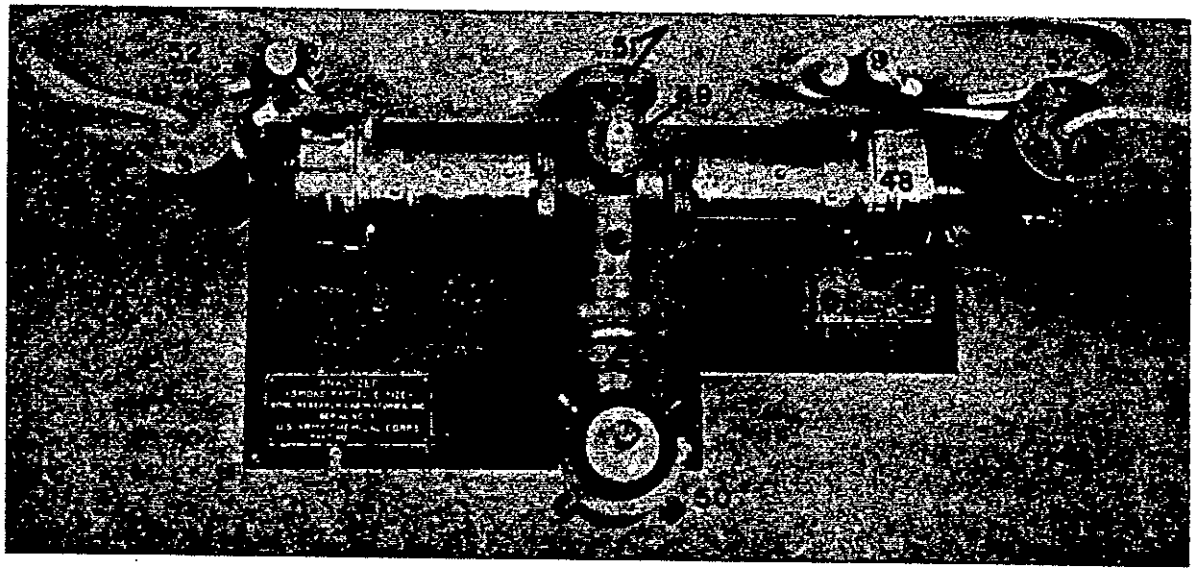

Figure 23. Mechanical analyzer, smoke-particle-size.

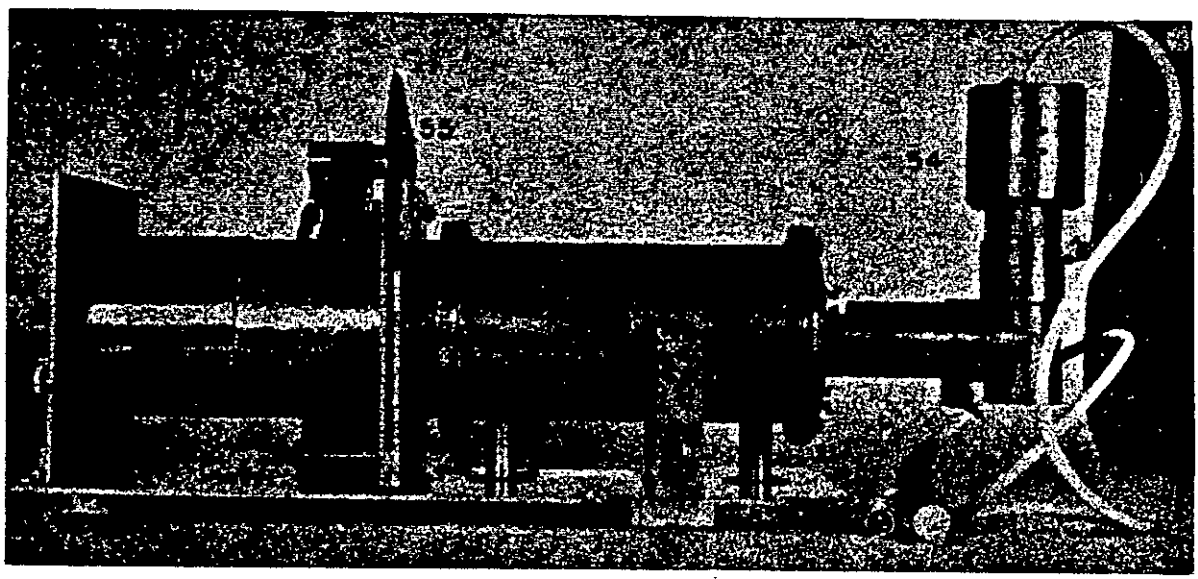

Figure 24. Scattering chamber.

1. Valve, air-intake.
2. Valve, water-intake.
3. Valve, water-drain.
4. Valve, DOP-drain.
5. Valve, vacuum-control.
6. Valve, diluent-control.
7. Valve, vapor-control.
8. Flowmeter, vapor.
9. Flowmeter, diluent.
10. Flowmeter, vacuum.
11. Control, particle-size.
12. Timer, warmup (minutes).
13. Control, jacket, and air-heater.
14. Release, chuck.
15. Push buttons, start and stop.
16. Switch, cell-lamp scattering-chamber.
17. Pilot lights, liquid-heater (ON and OFF).
18. Pilot light, warmup.
19. Master switch, pilot-light.
20. Push buttons, close-chuck.
21. Switch, disconnect.
22. Thermoregulator.
23. Thermometer.
24. Indicator, liquid-level.
25. Cock, DOP-filling.
26. Switch, power, particle-size-indicator.
27. Control, total-gain.
28. Switch, cell-lamp.
29. Control, intensity.
30. Switch, standard-lamp.
31. Controls, stray-light (A and B).
32. Switch, meter-sensitivity.
33. Controls, gain (A and B).
34. Control, meter-zero, particle-size-indicator.
35. Meter, particle-size-indicator.
36. Switch, calibrate.
37. Switch, power, percent-penetration-indicator.
38. Control, stray-light-compensation.
39. Control, coarse-gain.
40. Control, meter-zero, percent-penetration-indicator.
41. Meter, percent-penetration-indicator.
42. Control, fine-gain.
43. Switch, selector.
44. Light, NO-GO.
45. Light, GO.
46. Light, ready.
47. Knob, analyzer.
48. Scale, vernier.
49. Lamp, standard.
50. Lamp, cell, mechanical-analyzer.
51. Inlet port.
52. Photocell housings, mechanical-analyzer.
53. Lamp, cell, scattering-chamber.
54. Photocell housing, scattering-chamber.
55. Filter, light.
56. Valve, flushing-air.
57. Chuck, upper- and lower-jaw.
58. Filter, flushing-air, scattering chamber.
59. Lubricator, air-line.
60. Regulator, pressure.
61. Gage, pressure (20-p.s.i.).
62. Filter, air-line.
63. Filter, air-line.
64. Regulator, pressure.
65. Gage, pressure (7-p.s.i.).
66. Junction box, main.

Legend—Figures 14 through 24

OPERATION OF THE E1R3 WATER-REPELLENCY-TEST APPARATUS

1. SCOPE

1.1 This method describes the determination of water repellency of filter material with the E1R3 water-repellency test apparatus.

2. OUTLINE OF METHOD

2.1 The water repellency is determined by measuring the hydrostatic head supported by a test specimen before water penetration occurs. The test specimen is rigidly supported on one side, and an area of 20 square centimeters on the other side is exposed to water pressure which increases at essentially a constant rate. The height of the water column necessary to cause penetration, as shown by an indicator paper, is the water repellency of the specimen under test.

3. APPARATUS

3.1 The apparatus employed in the test is illustrated in figure 25. All parts designated by numbers in the text correspond to parts shown in the figure.

3.1.1 The essential parts of the apparatus are an air-pressure regulator (2) a water reservoir (6) a specimen holder (7) a manometer (8) and a scale (9) and three air-control valves (3, 4, 5).

3.1.2 The specimen holder (7) is a vise-like, cam-operated, spring-return clamp, with one fixed and one movable jaw. A brass ring fits into a semicircular yoke at one end of the movable jaw. The ring can be rotated on its horizontal axis for convenience in cleaning. A plexiglass window, recessed and cemented in the bottom of the brass ring, rigidly supports the top side of the specimen under test, and permits observation of the indicator paper covering the test specimen. Closing the specimen holder produces a watertight seal between the bottom of the test specimen and the edges of a cup, which is 20 square centimeters in area. Water enters this cup through copper tubing which is connected to the water reservoir (6) and the manometer (8).

3.1.3 Compressed air, regulated at 5 p.s.i., passes in turn through a pressure regulator (2), a fine mesh brass screen, a control valve (3), and shutoff cock (4) to the top of the water reservoir (6). As the air pressure is increased, the water pressure increases against the exposed 20 square centimeters area of the specimen in the holder (7). This increasing pressure is continuously indicated by the manometer (8). The water height at which penetration occurs is determined by reading the water level in the manometer (8), on scale (9), at the instant water penetrates the test specimen. Water penetration is determined by observing through the plastic window the first indication of color change which occurs on an indicator paper covering the test specimen.

4. REAGENTS AND MATERIALS

4.1 **Impregnating solution.** The impregnating solution for preparing the indicator paper contains 50 gm. of cobaltous chloride ($CoCl_2.6H_2O$) and 200 gm. of calcium chloride ($CaCl_2$) dissolved in 1 liter of water.

5. PREPARATION OF APPARATUS

5.1 **Connections.** Place the apparatus on a level bench and connect the inlet (1) of the pressure regulator to a compressed air line. Connect the regulator outlet (2) as shown on the figure.

5.2 **Adjustment of the control valve and the pressure regulator.**

5.2.1 Remove the pipe plug (10) and install an air-pressure gage (0 to 30 p.s.i.) between the pressure regulator (2) and the control valve (3) which is closed. Turn on the compressed air. Raise the handle of the specimen holder and fill the system by pouring water into the bottom jaw of the holder until the water is level with the top of the cup. Adjust the zero mark of the manometer scale (9) so that it is level with the tip of the cup. Place a sheet of soft rubber across the cup and clamp it tightly with the cam lever.

5.2.2 Open supply valve and adjust the pressure regulator to give a gage pressure of 5 p.s.i. Close the air exhaust cock (5) and open shutoff cock (4). Adjust control valve (3) so that the rate of water rise in the manometer is approximately 1 foot per minute. Close shutoff cock (4) and open the exhaust cock (5). Remove the air pressure gage and replace the pipe plug.

5.3 Testing the apparatus for leaks.

5.3.1 Place a soft rubber sheet across the cup in the holder (7) and clamp it tightly with the cam lever. Close the exhaust cock (5) and open shutoff cock (4). Let the water (see 7.2) in the manometer (8) rise to about 30 inches. Close the shutoff cock (4). Observe the water level in the manometer. If it falls faster than 1 inch per minute, there is a serious leak which should be corrected. If the water level holds for at least 1 minute, the apparatus is satisfactory. Open the exhaust cock (5) raise the cam lever of the holder (7) and remove the rubber gasket.

5.4 Preparation of indicator paper.

5.4.1 Soak folded paper towelling in the impregnating solution (4.1) for 20 to 30 minutes. Remove the paper, unfold, and dry in an oven or cover a steam radiator until the paper is blue. Cut the paper into 2½-inch squares. If the paper becomes moist in room air (indicated by turning orange), restore the blue color by heating the paper slightly or by storing in a dry place.

5.5 Preparation of specimen for test. Cut a 2¾-inch square specimen from the material to be tested.

6. PROCEDURE

6.1 Place the specimen to be tested on the cup in the base of the specimen holder. Place a sheet of indicator paper on the top of the test sample. Clamp the movable jaw by pressing down hard on the cam lever of the specimen holder. Close the air-exhaust cock (5) and open the shutoff cock (4).

6.2 See that the water rise in the manometer is about at the proper rate of 1 foot per minute. There is a normal delay of from 15 to 30 seconds before the water starts to rise, while the air space below the specimen is being filled with water. If the water rises too slowly or not at all, see that the brass screen located in the union above the control valve (3) is clean. If the screen is clean and the water rise is still incorrect, then readjust the control valve as described in 5.2.2.

6.3 Keep a close watch on the indicator paper through the plastic window in the specimen holder, as the water rises in the manometer. At the first sign of a color change (from blue to orange) of the indicator paper, immediately read the water level on the manometer scale (9) and close the shutoff cock (4). Record this reading on the manometer as inches of water repellency.

6.4 Open the exhaust cock (5). Remove the test specimen and indicator paper. Dry the plastic window of the holder with a soft cloth. Check the water level in the holder and refill if necessary. Reload the holder with another test specimen and repeat the procedure as outlined above in 6.1 through 6.4.

7. NOTES

7.1 Drain the water from the apparatus about once each week or whenever there is

any doubt that the water has been contaminated. To drain the water, shut off the compressed air at the supply valve and disconnect the union so that the unit can be turned upside down . Refill with clean water (preferably distilled) to guard against accidental contamination of the water with agents affecting the surface tension. Do not use soap or detergent in cleaning the apparatus.

7.2 **Water temperature.** Water temperature within the normal range of room temperature has no effect on test results.

7.3 This method was formerly covered by Chemical Corps Directive 242.

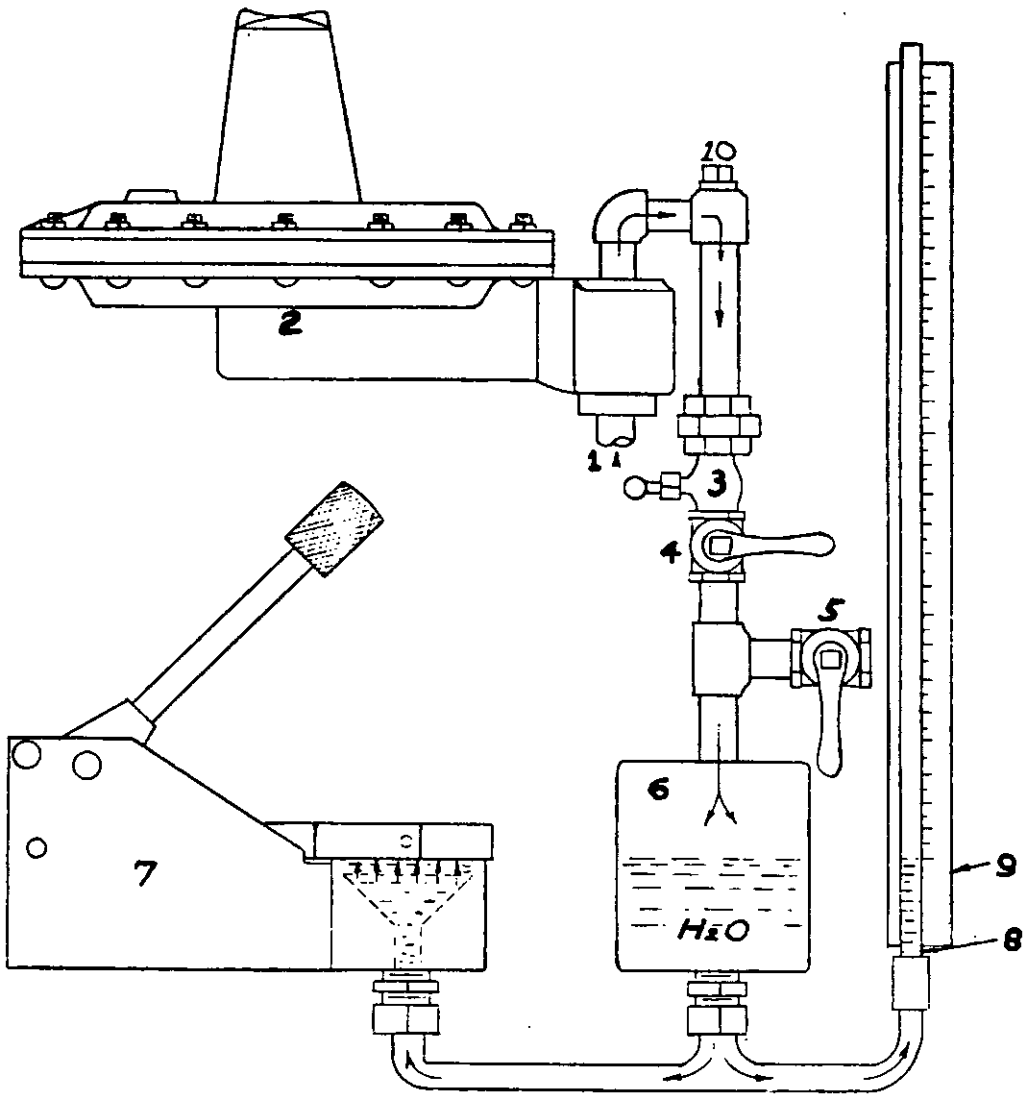

1. Compressed-air inlet.
2. Pressure regulator.
3. Needle valve.
4. Shut-off cock.
5. Exhaust cock.
6. Water reservoir.
7. Specimen holder.
8. Glass manometer.
9. Manometer scale.
10. Plug.

Figure 25. Schematic diagram, test-apparatus, water-repellency, E1R3.

MILITARY STANDARD

FILTER UNITS, PROTECTIVE CLOTHING, GAS-MASK COMPONENTS AND RELATED PRODUCTS: PERFORMANCE-TEST METHODS

TO ALL HOLDERS OF MIL-STD-282

1. The following pages of this standard have been added:

New Page	Date
48A	3 Dec 1974
48B	3 Dec 1974
52A	3 Dec 1974
52B	3 Dec 1974

2. Retain this Notice and insert before the Table of Contents.

3. Holders of MIL-STD-282 will verify that page additions indicated above have been entered. The notice page will be retained as a check sheet. This issuance, together with appended pages, is a separate publication. Each notice is to be retained by stocking points until the Military Standard is completely revised or cancelled.

Custodians:

Army - EA
Navy - Sh

Preparing Activity:

Army - EA
(Project 4240-0425)

MILITARY STANDARD

FILTER UNITS, PROTECTIVE CLOTHING, GAS-MASK COMPONENTS AND RELATED PRODUCTS: PERFORMANCE-TEST METHODS

TO ALL HOLDERS OF MIL-STD-282

1. The following pages of this standard have been added:

New Page	Date
42A	10 June 1974
42B	10 June 1974

2. Retain this Notice and insert before the Table of Contents.

3. Holders of MIL-STD-282 will verify that page additions indicated above have been entered. The notice page will be retained as a check sheet. This issuance, together with appended pages, is a separate publication. Each notice is to be retained by stocking points until the Military Standard is completely revised or cancelled.

Custodians:

Army - EA
Navy - SH

Preparing Activity:

Army - EA
(Project 4240-0427)

NOTICE
OF CHANGE

INCH-POUND

MIL-STD-282
NOTICE 3
10 February 1989

MILITARY STANDARD

FILTER UNITS, PROTECTIVE CLOTHING, GAS-MASK COMPONENTS AND RELATED PRODUCTS: PERFORMANCE-TEST METHODS

TO ALL HOLDERS OF MIL-STD-282:

1. THE FOLLOWING PAGES OF MIL-STD-282 HAVE BEEN REVISED AND SUPERSEDE THE PAGES LISTED:

NEW PAGE	DATE	SUPERSEDED PAGE	DATE
49		49	28 MAY 1956
50		50	28 MAY 1956

2. RETAIN THIS NOTICE AND INSERT BEFORE TABLE OF CONTENTS.

3. Holders of MIL-STD-282 will verify that page changes and additions indicated above have been entered. This notice page will be retained as a check sheet. This issuance, together with appended pages, is a separate publication. Each notice is to be retained by stocking points until the military standard is completely revised or canceled.

Custodians:

Army - EA

Navy - SH

Preparing activity:

Army - EA

(Project 4240-A974)

AMSC N/A

FSC 4240

DISTRIBUTION STATEMENT A. Approved for public release; distribution is unlimited.

NOTICE OF CHANGE

INCH-POUND

MIL-STD-282
NOTICE 4
12 January 1995

MILITARY STANDARD

FILTER UNITS, PROTECTIVE CLOTHING, GAS-MASK COMPONENTS AND RELATED PRODUCTS: PERFORMANCE-TEST METHODS

TO ALL HOLDERS OF MIL-STD-282:

1. THE FOLLOWING PAGES OF MIL-STD-282 HAVE EITHER BEEN REVISED AND SUPERSEDE THE PAGES LISTED OR BEEN ADDED:

NEW PAGE	DATE	SUPERSEDED PAGE	DATE
39	12 January 1995	39 and 40	28 May 1956
		42A and 42B	10 June 1974
43	12 January 1995	43	28 May 1956
44	12 January 1995	44	28 May 1956
45	12 January 1995	45	28 May 1956
45A	12 January 1995		
46	12 January 1995	46	28 May 1956
48A	12 January 1995	48A	3 December 1974
48B	12 January 1995	48B	3 December 1974
48C	12 January 1995		
48D	12 January 1995		
49	12 January 1995	49	10 February 1989
50	12 January 1995	50	10 February 1989
50A	12 January 1995		
51	12 January 1995	51	28 May 1956
52A	12 January 1995	52A and 52B	3 December 1974

AMSC N/A

FSC 4240

DISTRIBUTION STATEMENT A. Approved for public release; distribution is unlimited.

2. RETAIN THIS NOTICE AND INSERT BEFORE THE TABLE OF CONTENTS.

3. Holders of MIL-STD-282 will verify that page changes and additions indicated above have been entered. This notice page will be retained as a check sheet. This issuance, together with appended pages, is a separate publication. Each notice is to be retained by stocking points until the military standard is completely revised or canceled.

Custodians:

Army - EA
Navy - SH

Review activity:

Navy - YD

Preparing activity:

Army - EA

Project No. 4240-0593

STANDARDIZATION DOCUMENT IMPROVEMENT PROPOSAL

(See Instructions – Reverse Side)

1. DOCUMENT NUMBER	2. DOCUMENT TITLE

3a. NAME OF SUBMITTING ORGANIZATION	4. TYPE OF ORGANIZATION *(Mark one)*
b. ADDRESS *(Street, City, State, ZIP Code)*	☐ VENDOR ☐ USER ☐ MANUFACTURER ☐ OTHER *(Specify)*: _____

5. PROBLEM AREAS

a. Paragraph Number and Wording:

b. Recommended Wording:

c. Reason/Rationale for Recommendation:

6. REMARKS

7a. NAME OF SUBMITTER *(Last, First, MI)* – Optional	b. WORK TELEPHONE NUMBER *(Include Area Code)* – Optional
c. MAILING ADDRESS *(Street, City, State, ZIP Code)* – Optional	8. DATE OF SUBMISSION *(YYMMDD)*

DD FORM 82 MAR 1426 PREVIOUS EDITION IS OBSOLETE.