METRIC

MIL-HDBK-46164
2 January 1996
SUPERSEDING
MIL-R-46164C
13 June 1983

DEPARTMENT OF DEFENSE

HANDBOOK FOR RUSTPROOFING FOR MILITARY VEHICLES AND TRAILERS

This handbook is for guidance only. Do not cite this document as a requirement.

AMSC N/A AREA MFFP

DISTRIBUTION STATEMENT A Approved for public release, distribution is unlimited

FOREWORD

1 This handbook is approved for use by all Departments and Agencies of the Department of Defense

2 This handbook is for guidance only. This handbook cannot be cited as a requirement. If it is, the contractor does not have to comply.

3. Beneficial comments (recommendations, additions, deletions) and any pertinent data which may be of use in improving this document should be addressed to. U.S. Army Tank-automotive and Armaments Command, ATTN AMSTA-TR-E/BLUE, Warren, MI 48397-5000, by using the Standardization Document Improvement Proposal (DD Form 1426) appearing at the end of this document or by letter

CONTENTS

PARAGRAPH		PAGE
	FOREWORD	ii
1.	SCOPE	1
1.1	Scope	1
1.2	Purpose	1
2	APPLICABLE DOCUMENTS	2
2 1	General	2
2 2	Government documents	2
2 2.1	Specifications, standards and handbooks	2
2 2.2	Other Government documents, drawings and publications	2
2 3	Order of precedence	3
3	DEFINITIONS	4
3 1	Acronyms	4
3 2	Terms	4
4	RUSTPROOFING	5
4 1	General	5
4 2	Materials	5
4 3	Application equipment	5
4.3.1	Spray gun	5
4 3.2	Nozzle	5
4.3 3	Applicators	5
4.3.3 1	Applicator assembly (90°)	6
4 3 3 2	Applicator assembly (45°)	6
4.3 3 3	Flexible applicator assembly	6
4.3.3 4	Rigid applicator assembly	6
4.3.3 5	All purpose applicator assembly	6
4 4	Application procedure	6
4 4.1	Thickness	6
4.4.2	Access and drain holes	7
4 4.2 1	Tactical vehicles	7
4 4 2 2	Non-tactical vehicles	7
4 4.3	Application areas	7-8
4.4.3 1	Prohibited application areas	8
4 5	Marking	9

5	NOTES	10
5 1	Intended use	10
5 2	Subject term (key word) listing	10

FIGURE		PAGE
1	Applicator assemblies	11
2	Vehicle areas to be rustproofed	12
3	Spraying inside of rocker panel	13
4	Spraying inside of center door post	13
5	Spraying inside of door	13
6	Vehicle areas to be rustproofed	14
7	Vehicle areas to be rustproofed	15
8	Vehicle areas to be rustproofed	16
9	Trailer areas to be rustproofed	17
10	Trailer areas to be rustproofed	18

1. SCOPE

1.1 Scope. This handbook gives guidelines for rustproofing for military vehicles and trailers. This handbook is for guidance only. This handbook cannot be cited as a requirement. If it is, the contractor does not have to comply.

1.2 Purpose This handbook covers the application of corrosion preventative compounds to all sheet metal areas of military vehicles and trailers including the frame, inner panels and all its structural members. When applied, such compounds will prevent rusting of vehicles and trailers, in all severe environmental areas.

2 APPLICABLE DOCUMENTS

2 1 General The documents listed below are not necessarily all of the documents referenced herein, but are the ones that are needed in order to fully understand the information provided by this handbook

2 2 Government documents

2 2 1 Specifications, standards, and handbooks The following specifications, standards, and handbooks form a part of this document to the extent specified herein Unless otherwise specified, the issues of these documents are those listed in the Department of Defense Index of Specifications and Standards (DODISS)

SPECIFICATIONS

FEDERAL

MIL-C-62218A(AT) - Corrosion Preventive Compound Cold Application (for Fielded Motor Vehicles and Trailers)

(Unless otherwise indicated, copies of the above specifications, standards, and handbooks are available from the Standardization Document Order Desk, 700 Robbins Avenue, Building 4D, Philadelphia, PA 19111-5094.)

2 2 2 Other Government documents, drawings and publications The following other Government documents, drawings, and publications form a part of this document to the extent specified herein

DRAWINGS

ARMY

11621624 - Plug, Button

(Copies of drawings are available from the U S Army Tank-automotive and Armaments Command, Warren, MI 48397-5000)

DEPARTMENT OF LABOR OCCUPATIONAL SAFETY AND HEALTH ADMINISTRATION (OSHA)

OSHA - Safety and health regulations.

(Application for copies should be addressed to the Department of Labor, Assistant Secretary of Labor, Occupational Safety and Health Administration, Washington, DC 20210.)

2.3 Order of precedence. In the event of a conflict between the text of this document and the references cited herein, the text of this document takes precedence. Nothing in this document, however, supersedes applicable laws and regulations unless a specific exemption has been obtained.

3 DEFINITIONS

3.1 Acronyms The acronyms used in this handbook are defined as follows:

a DODISS - Department of Defense Index of Specifications and Standards
b. GFE - Government Furnished Equipment
c. OSHA - Occupational Safety and Health Administration

3 2 Terms Select terms used in this handbook are defined as follows·

a Ferrule A ring or a cap usually of metal put around a slender shaft (as a cane or a tool handle) to strengthen it or prevent splitting

b. Inner panels The inner panels separate the cargo compartment from the outside of the vehicle providing a double-wall structure. If the inner panels do not exceed the full height of the body, spray the compound from the top edge downward. In some cases, 9.5 millimeters (mm) (0 375 inch (in)) or 12 7 mm (0 5 in) holes are drilled 152 4 mm (6 in) to 203.2 mm (8 in) from the bottom of the inner panel between all vertical braces Insert a short curved wand and spray the lower portion of this area.

c. Wand Any of various pipe like devices, especially the rigid tube between the hose and the nozzle

d Structural members In a unitized or semi-unitized body, boxed-frame members are usually used. These areas are thoroughly treated inside and out because of their contact with the body surface Small, but similar members welded to the floor pan should also be treated inside and out Access to these areas may be gained through gage and drain holes already present A short curved wand is used for spraying the inside of these areas

4. RUSTPROOFING

4 1 General This handbook covers the general procedures for rustproofing vehicles and trailers.

4.2 Materials The corrosion preventive compounds used for application to military vehicles and trailers, conforms to MIL-C-62218A(AT), and the proper application of these compounds will prevent rusting of vehicles in all severe environmental areas These areas include, but are not limited to the following

a. Acid rain
b Heavy rainfall
c. High-humidity
d Snow
e. Salt spray
f. Tropical
g Industrial pollutant
h Atmosphere pollutant

4.3 Application equipment

4 3 1 Spray gun An airless atomization-type spray gun designed for fluid pressure atomization should be used The spray gun should be capable of spraying materials on vertical or horizontal surfaces without abnormal fatigue to the operator Material passages should be adequate for material demand required for spraying with a minimum drop in pressure The gun will consist of a body, applicator (wand), and necessary parts for the assembly of nozzle(s), material valve, filter connection, and a trigger

4.3 2 Nozzle The nozzle(s) is equipped with a tungsten carbide spray nozzle or tip capable of providing cone and flat-fan shaped patterns The size of the nozzle is capable of passing through a 12 7 mm (0 5 in) hole when assembled to an applicator with sufficient forward and backward throw for adequate coverage

4 3 3 Applicators A series of wands or applicators capable of operating through 12 7 mm (0 5 in) access hole are provided Types of applicator assemblies, each designed for a specific operation, are used as specified herein.

4 3 3 1 Applicator assembly (90°) An applicator 304 8 mm (12 in) long with a 90° angle, bent 38 1 mm (1 5 in) from nozzle end, with a flat spray nozzle, having a 0.66 mm (0 026 in) spray orifice, and a rigid straight spray, should be used to spray the interior surfaces or boxed-in sections of vehicles and trailers. This wand assembly consists of a tip, nozzle, tube, nut, ferrule, coupling, filter assembly, and quick-disconnect plug (see figures 1.A and 1 F). Due to extremely high operating pressures, it is important that all connections be properly tightened to prevent leakage of rust proofing material

4 3 3 2 Applicator assembly (45°) An applicator with a straight-through flat pattern, 304 8 mm (12 in) long with a 45° angle, bent 38 1 mm (1 5 in) from nozzle end, should be used to spray exterior underbody panels and frame rails The nozzle used with this applicator assembly has a 0 66 mm (0 026 in) orifice (see figure 1 B)

4 3 3.3 Flexible applicator assembly A flexible applicator, 1828 8 mm (72 in) long with a straight-through cone, pattern nozzle (see figure 1 C), should be used primarily for fog spraying on enclosed curved sections and rocker panels

4 3 3 4 Rigid applicator assembly A rigid spray applicator 1524 mm (60 in) long with a straight through cone pattern nozzle (see figure 1 D), should be used for fog spraying of door panels and other enclosed body areas

4 3.3 5 All purpose applicator assembly An all purpose applicator with a flat-fan spray applicator (see figure 1.E), should be used to spray vehicle areas that cannot be reached with foregoing applicators.

4 4 Application procedure Vehicles and trailers are to be clean, dry, and free from loose materials prior to application of rustproofing compounds Vehicles or trailers that have accumulated deposits of rust, mud, dirt, oil, and grease, are to be cleaned by an suitable means such as power water washing Allow vehicles to air dry a minimum of 24 hours before applying rustproofing compound(s) Blowing of air in lieu of drying by air for 24 hours is also acceptable. Surface preparation of vehicle areas to be rustproofed is necessary because it has a direct bearing on the life of the coating During application of rustproof compound(s), particular attention should be given to those areas of the vehicle that are most susceptible to corrosion such as seams, welds, crevices, and hidden recessed areas During cleaning and application procedures, operator should process vehicle in a well-ventilated area, and wear protective clothing such as goggles, face shields, rubber gloves, aprons, and boots

4.4.1 Thickness The corrosion preventive compound is applied to a film thickness of 0.127 mm (5 mils) minimum measured when the film is dry to touch. If necessary to obtain the required thickness, two or more coats of compound may be applied with a two hour minimum drying time between each coat

4 4.2 Access and drain holes After application and drying of corrosion preventive compound, all drilled access holes in body, engine compartment, and wheel splash panels are closed with plugs conforming to Drawing 11621624. Plug color is in the range of dark brown to black Inspection hole plugs, if removed for application of compound or inspection, are to be reinstalled Drain holes and passages are not to be plugged

4 4 2 1 Tactical vehicles Military drawings and technical document(s) showing all access holes, areas to be covered, drainage holes, and other pertinent rustproofing details should be provided for such vehicles

4 4 2.2 Non-tactical vehicles Access holes (12 7 mm (0 5 in)) are drilled for inserting application tools The location of the holes is as specified. Boxed-in areas have access holes drilled on no greater than 457.2 mm (18 in) centers After application, the holes should be sealed with weather resistant plastic or rubber caps

4.4 3 Application areas Vehicles and trailers are to be rustproofed in accordance with a drawing or sketch supplied by the Government, or prepared by the contractor for Government approval Areas requiring corrosion preventive compound(s) include, but are not limited to the following

a Splash panel (see figure 2)
b Sheet metal header (see figures 2, 5, 6, 7, 8)
c Light wells (see figures 2, 6, 7, 8)
d Fenders and quarter panels (see figures 2, 6, 7, 8)
e Hood and deck lid (see figures 6, 7, 8)
f. Cowl and fire wall (see figures 6, 7, 8)
g Rocker panel and dog legs (see figures 2, 3, 6, 7, 8)
h Seams and moldings (see figures 2, 6, 7, 8)
i. Floor pan (see figure 6, 7, 8)
j Structural members (see figures 2, 6, 7, 8)
k Center door and windshield posts (see figures 2, 4, 6, 7, 8)
l Front and rear door pillars (see figures 2, 6, 7, 8)
m. Front and rear doors (see figures 5, 6, 7, 8)
n Trunk lid and lower rear beads (see figures 2, 6)
o Tailgate (see figure 6)
p Roofs and trunk cabs (see figures 6, 7, 8)
q Unitized body
r Fuel tank and lines (exterior)
s Catwalks
t Body and undersides, including enclosed and expansible vans, cargo, dump, ambulance, crane, light trucks, station wagons, etc

u Fuel dispersing pumps, water dispersing pumps, and meter cabinets
v Inner panels (see 3 2b)
w Crane gondolas
x Trailers, including frame, crossmembers, stake, pockets, and underbody (see figures 9, 10)
y Miscellaneous corrosion-producing vehicle or trailer areas

NOTE All figures are shown for illustrative purposes only, and are not to be used in lieu of approved drawings or sketches showing areas to be rustproofed for specific vehicles and trailers

4 4 3 1 Prohibited application areas Caution must be taken during application of corrosion preventive compound to avoid the coating of components, assemblies, or subassemblies whose function or life could be affected by the compound This applies to any portion of moving components (mechanical or electrical) considered to be part of the vehicle This includes, but is not limited to the following

a Bearing surfaces
b Rubber or plastic
c Engine and components
d Engine exhaust system
e Transmission housing
f Transfer case
g Drive shafts and universal joints
h Parking brake and linkage
i Brake drums
j Disc brake components
k Brake backing plates
l Axle
m Shock absorbers
n Steering gear box
o Steering linkage
p Heat shields and catalytic converters
q Air cleaner
r Air inlet pipes
s Lubrication fittings
t Component breathers
u Wheel and tire surfaces
v Fan, generator, alternator belts, and power steering belt, if applicable.
w. Fuel tanker dispensing equipment.
x Upholstery, windows, and trim

y. Window lift and door lock mechanisms
z. Miscellaneous non-sheet metal areas.

4.5 Marking. A decal identifying the rustproofing process and processor should be furnished and mounted in a visible location inside the vehicle or under the hood, and for trailers, locate decal adjacent to data plate. The decal should include, but is not limited to the following information:

a Make and model number.
b. Contractor and company rustproofing the vehicle or trailers.
c Rustproofing material used and its manufacturer.
d Date vehicle or trailer was rustproofed
e. Contract number.

5 NOTES

5 1 Intended use. This handbook is intended to outline the methods for application of rustproofing compounds to sheet metal areas including frame, inner panels, and structural members of military vehicles and trailers. When applied in accordance with such methods, vehicles and trailers are protected against rusting in any severe corrosion hazard environment

5 2 Subject term (key word) listing

Acid rain
Application of rustproofing
Coating
Corrosion preventive compounds
Rusting of vehicles
Salt spray
Severe environment
Sheet metal coating
Steam cleaning effects

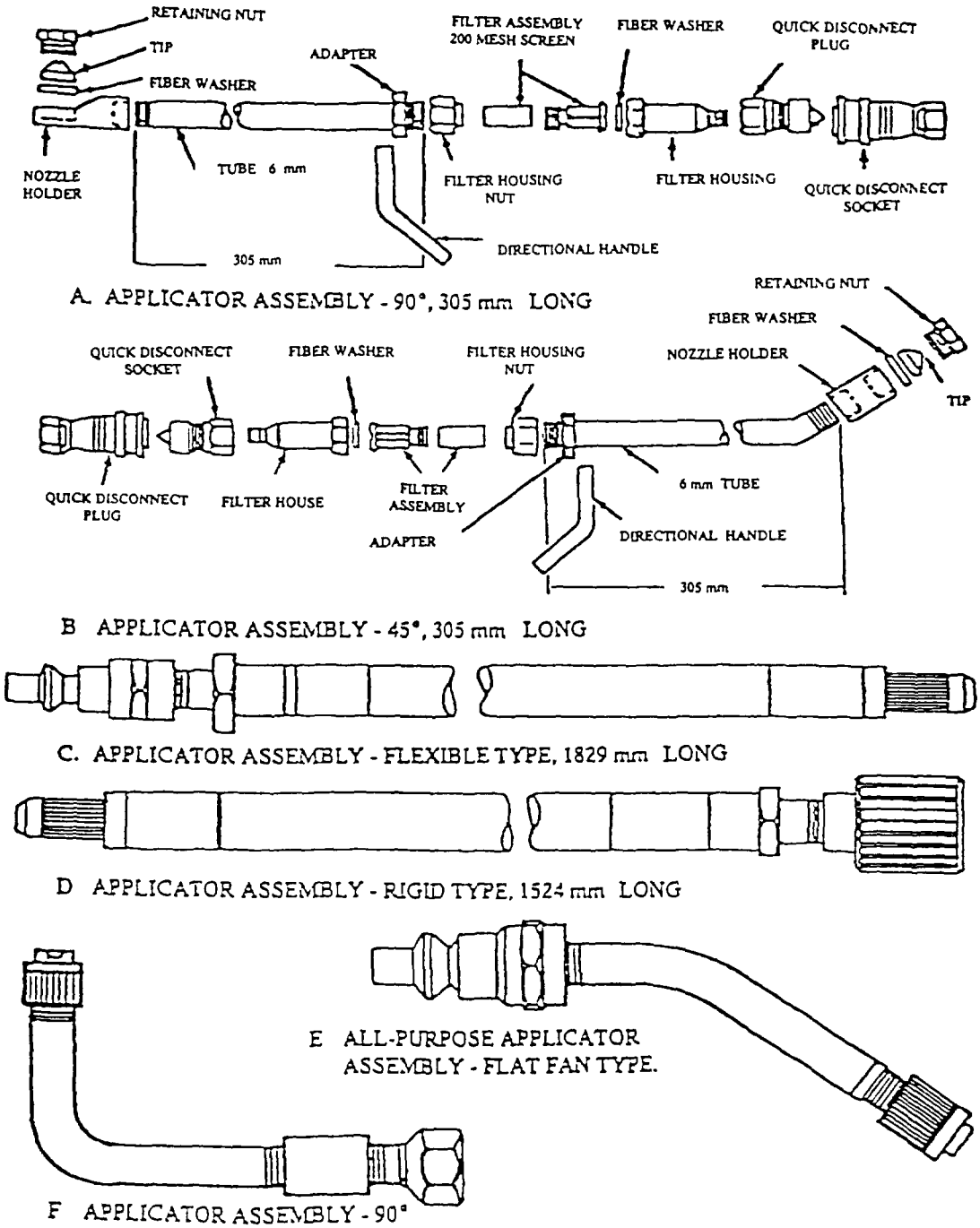

FIGURE 1. Applicator assemblies.

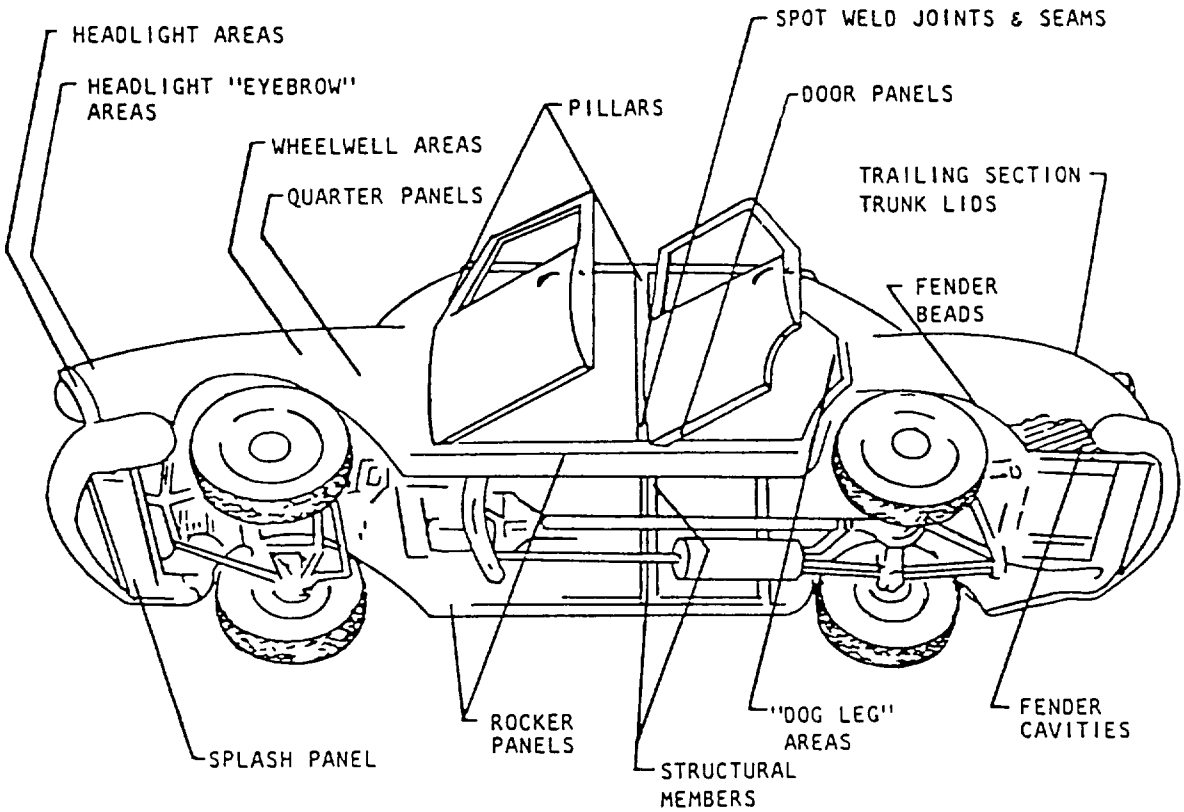

FIGURE 2. Vehicle areas to be rustproofed.

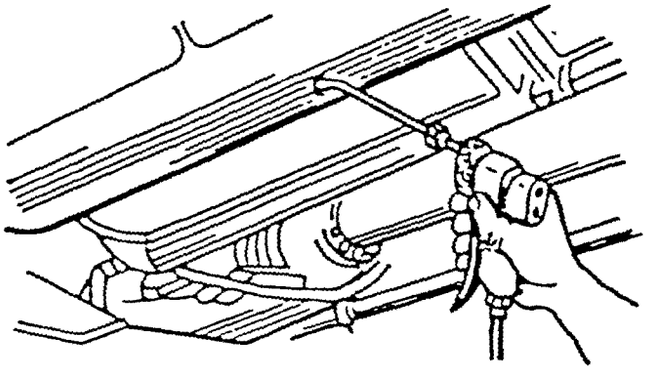

FIGURE 3 Spraying inside of rocker panel

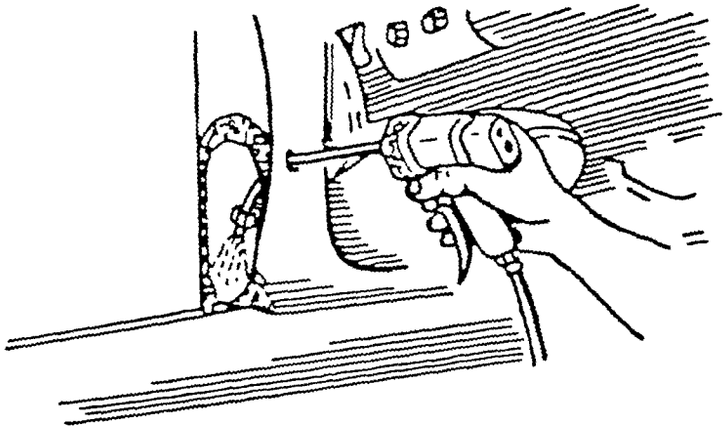

FIGURE 4 Spraying inside of center door post

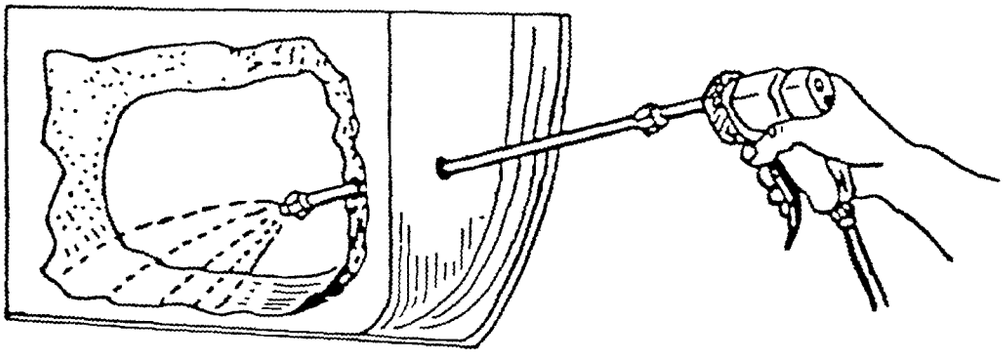

FIGURE 5 Spraying inside of door.

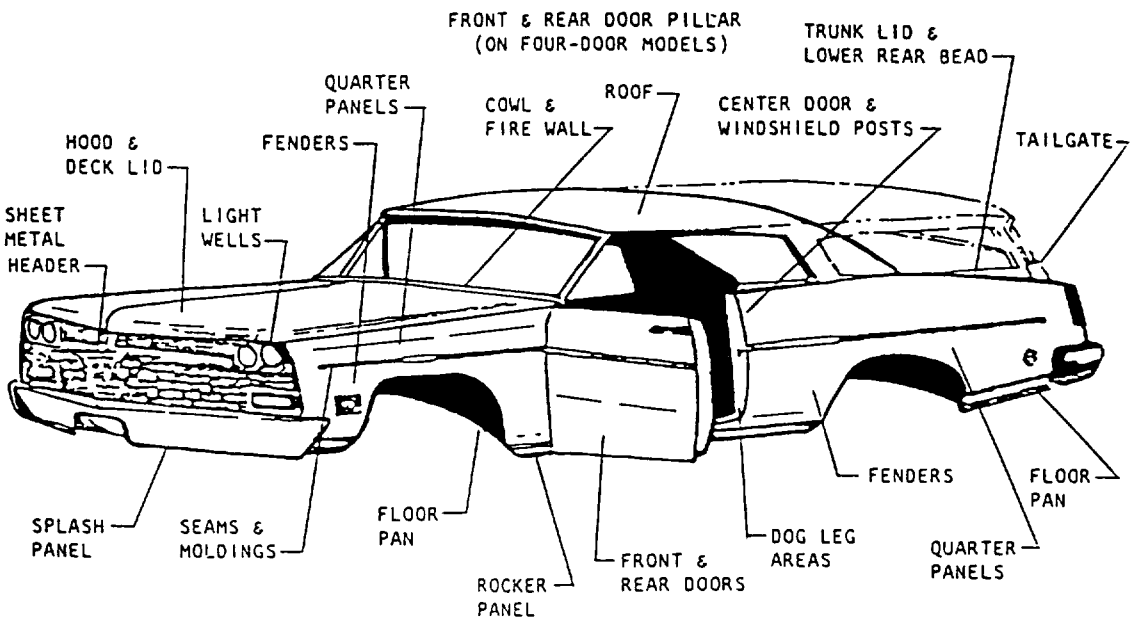

FIGURE 6. Vehicle areas to be rustproofed.

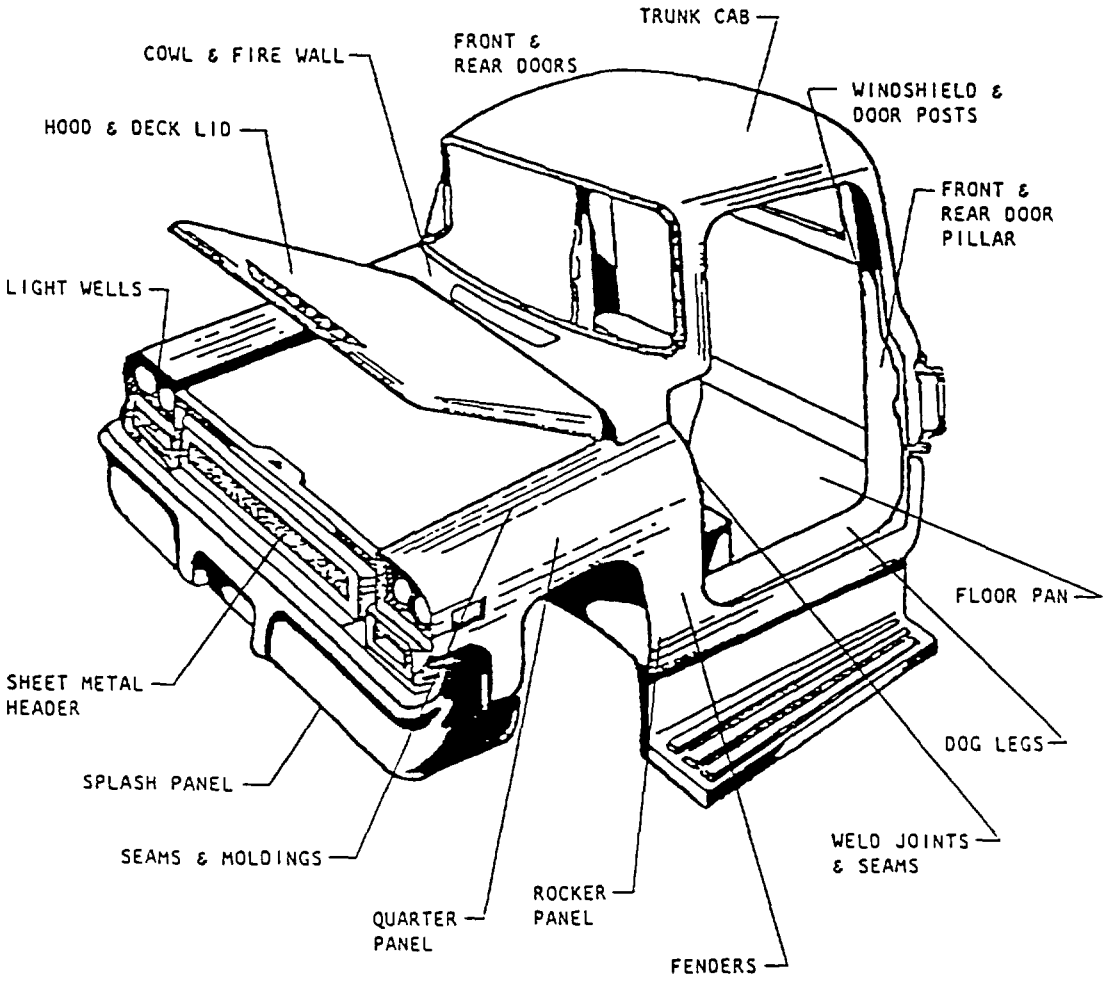

FIGURE 7. Vehicle areas to be rustproofed.

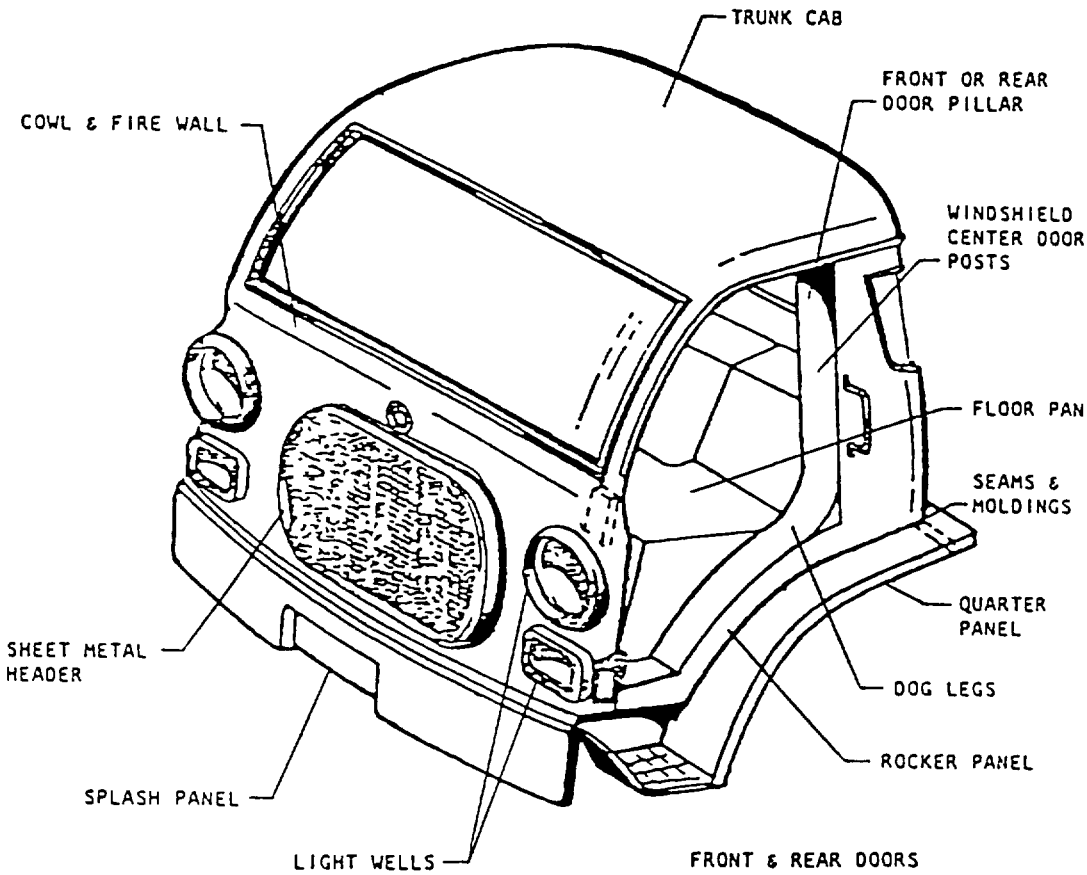

FIGURE 8. Vehicle areas to be rustproofed.

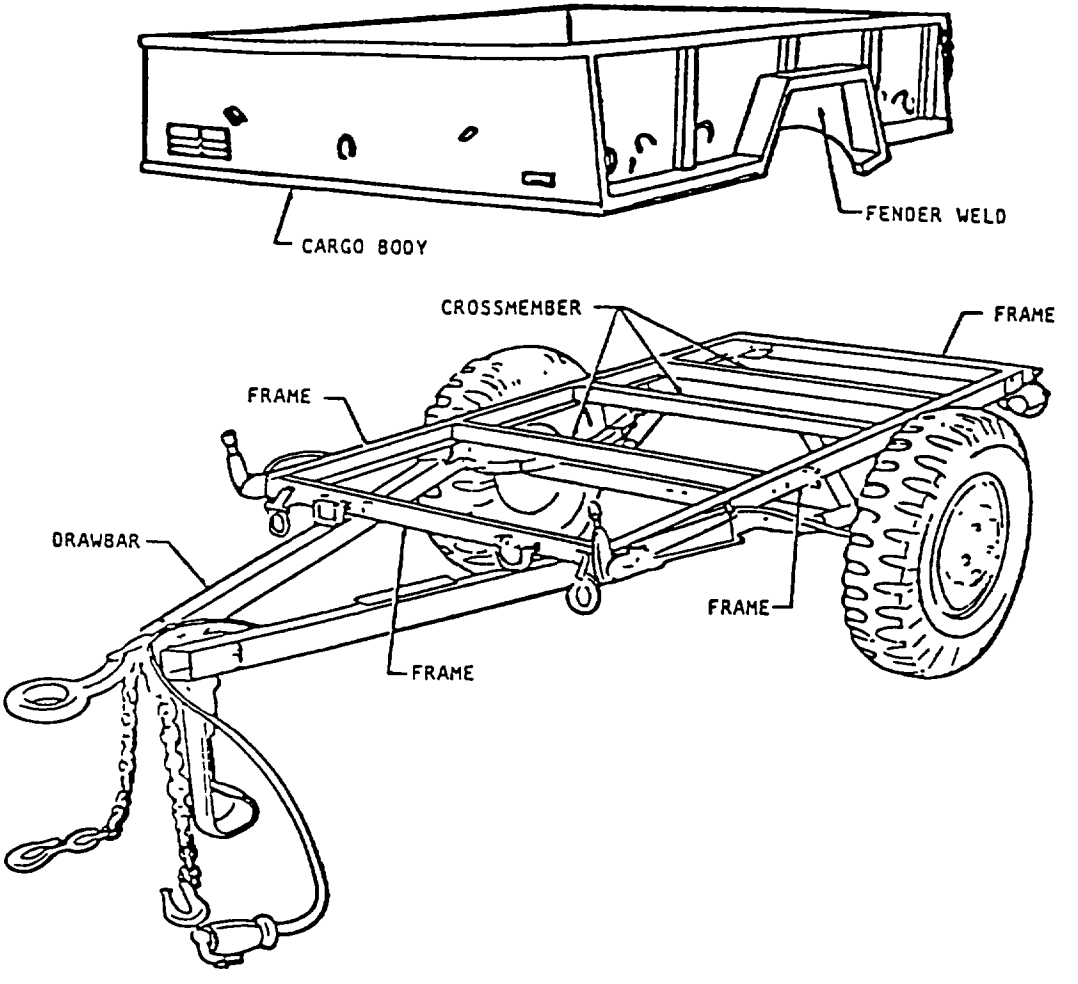

FIGURE 9. Trailer areas to be rustproofed.

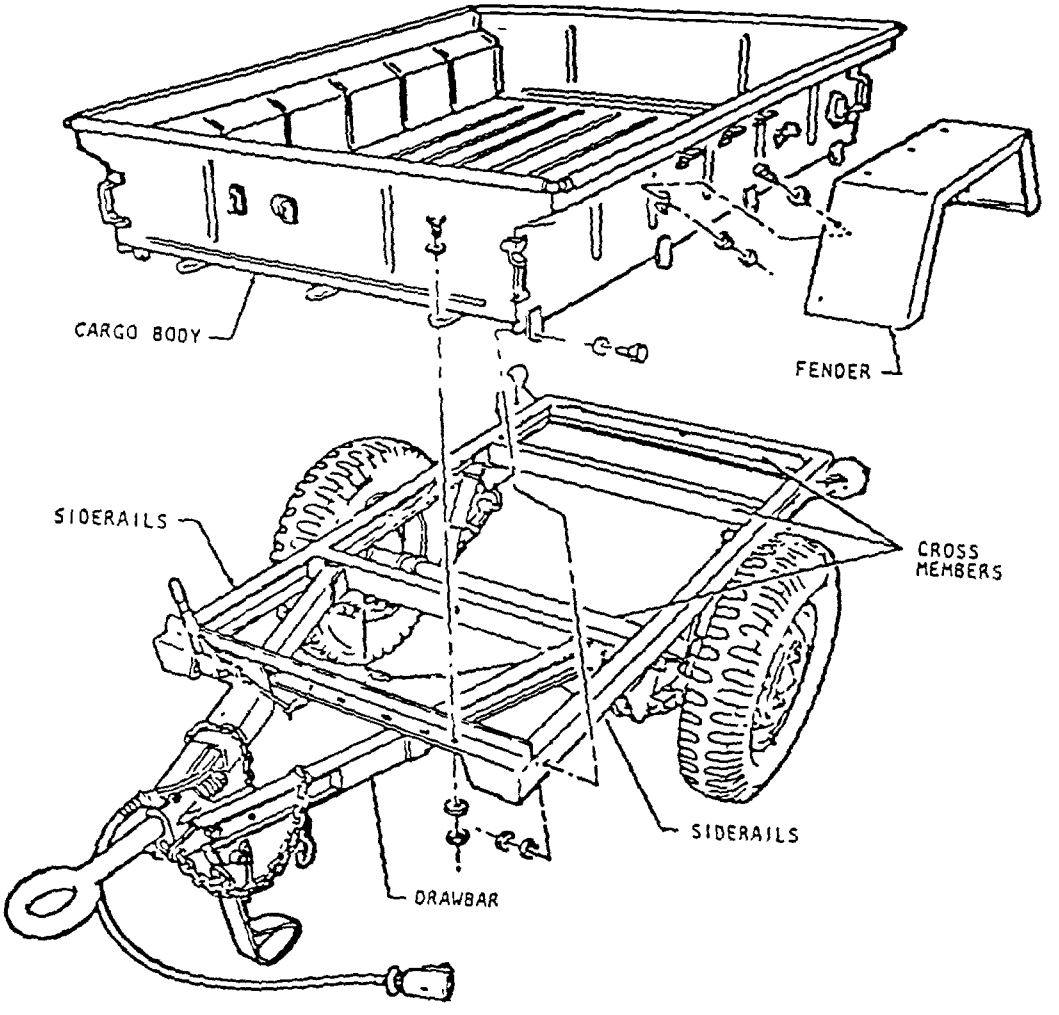

FIGURE 10. Trailer areas to be rustproofed

CONCLUDING MATERIAL

Custodians.
Army - AT
Air Force - 99

Review activities:
Army - MR
Air Force - 84

Preparing activity:
Army - AT

(Project MFFP-0570)

STANDARDIZATION DOCUMENT IMPROVEMENT PROPOSAL

INSTRUCTIONS

1. The preparing activity must complete blocks 1, 2, 3, and 8. In block 1, both the document number and revision letter should be given.
2. The submitter of this form must complete blocks 4, 5, 6, and 7.
3. The preparing activity must provide a reply within 30 days from receipt of the form.

NOTE: This form may not be used to request copies of documents, nor to request waivers, or clarification of requirements on current contracts. Comments submitted on this form do not constitute or imply authorization to waive any portion of the referenced document(s) or to amend contractual requirements.

I RECOMMEND A CHANGE:

1. DOCUMENT NUMBER: MIL-HDBK-46164
2. DOCUMENT DATE (YYMMDD): 960102
3. DOCUMENT TITLE: Rustproofing for Military Vehicles and Trailers
4. NATURE OF CHANGE (Identify paragraph number and include proposed rewrite, if possible. Attach extra sheets as needed.)

5. REASON FOR RECOMMENDATION

6. SUBMITTER

a. NAME (Last, First, Middle Initial):

b. ORGANIZATION:

c. ADDRESS (Include Zip Code):

d. TELEPHONE (Include Area Code)
(1) Commercial:
(2) AUTOVON (If applicable):

7. DATE SUBMITTED (YYMMDD):

8. PREPARING ACTIVITY

a. NAME:

b. TELEPHONE (Include Area Code)
(1) Commercial: (810) 574-8745
(2) AUTOVON: 786-8745

c. ADDRESS (Include Zip Code): Commander
U.S. Army Tank-automotive and Armaments Command, ATTN: AMSTA-TR-E/BLUE
Warren, MI 48397-5000

IF YOU DO NOT RECEIVE A REPLY WITHIN 45 DAYS, CONTACT:
Defense Quality and Standardization Office
5203 Leesburg Pike, Suite 1403, Falls Church, VA 22041-3466
Telephone (703) 756-2340 AUTOVON 289-2340