FED. SUP CLASS
5935

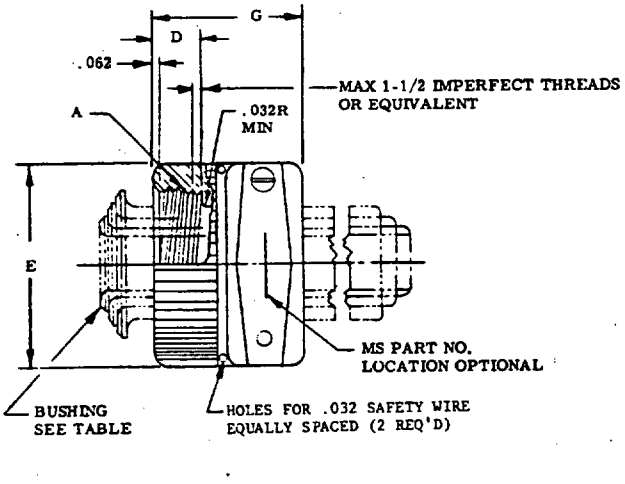


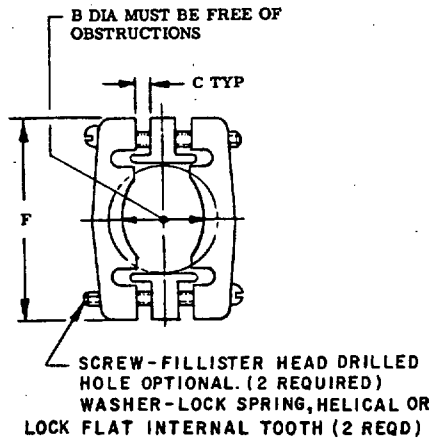


## TYPE A - CABLE CLAMP, STRAIN RELIEF

| DASH NO. (a) | CONNECTOR SHELL SIZE (REF) (b) | A THREAD | B MAX | C | D | E ±.031 DIA | F ±.031 | G ±.031 | BUSHING (REF) (c) |
|---|---|---|---|---|---|---|---|---|---|
| -3A | 8S AND 10S | .500-28 UNEF-2B | .250 | .047 | .406 | .688 | .812 | .812 | MS3420-3 |
| -4A | 10SL, 12S AND 12 | .625-24 UNEF-2B | .312 | .062 | | .812 | 875 | | MS3420-4 |
| -6A | 14S AND 14 | .750-20 UNEF-2B | .438 | .078 | | .969 | 1.062 | .875 | MS3420-6 |
| -8A | 16S AND 16 | .875-20 UNEF-2B | .562 | .109 | | 1.094 | 1.156 | .938 | MS3420-8 |
| -10A | 18 | 1.000-20 UNEF-2B | .625 | .125 | | 1.188 | 1.250 | | MS3420-10 |
| -12A | 20 AND 22 | 1.188-18 UNEF-2B | .750 | .156 | | 1.375 | 1.469 | | MS3420-12 |
| -16A | 24 AND 28 | 1.438-18 UNEF-2B | .938 | .188 | | 1.656 | 1.688 | 1.031 | MS3420-16 |
| -20A | 32 | 1.750-18 UNS-2B | 1.250 | .250 | .469 | 2.031 | 2.031 | 1.094 | MS3420-20 |
| -24A | 36 | 2.000-18 UNS-2B | 1.375 | .297 | .531 | 2.219 | 2.281 | 1.156 | MS3420-24 |
| -28A | 40 | 2.250-16 UN-2B | 1.625 | .328 | | 2.500 | 2.688 | 1.688 | MS3420-28 |
| -32A | 44 | 2.500-16 UN-2B | 1.875 | .375 | .594 | 2.781 | 2.938 | 1.750 | MS3420-32 |
| -40A | 48 | 3.000-16 UN-2B | 2.375 | .453 | .656 | 3.281 | 3.500 | | MS3420-40 |

(a) PART NUMBERS MS3057-3A THROUGH -40A ARE INTERCHANGEABLE WITH PART NUMBERS AN3057-3A THROUGH 40A.
(b) CLAMP MATES WITH CONNECTOR SHELL SIZE LISTED IN THIS COLUMN.
(c) BUSHINGS FOR REFERENCE ONLY AND NOT SUPPLIED AS PART OF CLAMP.
FOR ADDITIONAL CLOSE DOWN OF THE B DIMENSION, BUSHINGS MS3420-3 THROUGH MS3420-40 MAY BE USED.
ONE BUSHING AS REQUIRED FOR MS3057-3A THROUGH MS3057-12A, CORRESPONDING TO MS3420-3 THROUGH MS3420-12.
TWO BUSHINGS AS REQUIRED FOR MS3057-16A THROUGH MS3057-24A, ONE EACH CORRESPONDING TO MS3420-16 THROUGH MS3420-24, AND MS3420-12 THROUGH MS3420-20. (EXAMPLES: MS3057-16A REQUIRES ONE MS3420-16 AND ONE MS3420-12.)
THREE BUSHINGS AS REQUIRED FOR MS3057-28A THROUGH MS3057-40A, ONE EACH CORRESPONDING TO MS3420-28 THROUGH MS3420-40, AND MS3420-24 THROUGH MS3420-32, AND MS3420-20 THROUGH MS3420-28. (EXAMPLES: MS3057-40A REQUIRES ONE MS3420-40, ONE MS3420-32, AND ONE MS3420-28.)

NOTES:
1. DIMENSIONS IN INCHES. UNLESS OTHERWISE SPECIFIED, TOLERANCES: DECIMALS ±.016. ANGLES ±2°. DIMENSIONS AND TOLERANCING IN ACCORDANCE WITH ANSI Y14.5-1973.
2. MATERIAL: ALUMINUM ALLOY, QQ-A-591, ALLOY NO. 13.
3. FINISH: IN ACCORDANCE WITH MIL-C-5015.
4. THREADS IN ACCORDANCE WITH MIL-S-7742.
5. REMOVE ALL BURRS AND SHARP EDGES.

FOR DESIGN FEATURE PURPOSES. THIS STANDARD TAKES PRECEDENCE OVER PROCUREMENT DOCUMENTS REFERENCED HEREIN. REFERENCED DOCUMENTS SHALL BE OF THE ISSUE IN EFFECT ON DATE OF INVITATIONS FOR BID.

(E) INACTIVE FOR DESIGN AFTER 1 JULY 1982. DOCUMENT WILL BE CANCELLED AFTER 1 JULY 1984, USE MIL-C-85049/1,/2,/41,/42

(E) DENOTES CHANGES

| | | | |
|---|---|---|---|
| P.A Navy - AS<br>Other Cust<br>Army - EL<br>USAF - 85 | International interest | TITLE<br>CLAMPS, CABLE, ELECTRICAL CONNECTOR | MILITARY STANDARD<br>MS 3057 |
| Procurement Specification<br>MIL-C-5015 | | SUPERSEDES:<br>AN3057 | PAGE 1 OF 8 |

DD FORM 1 MAY 73 672 (Coordinated) PREVIOUS EDITIONS OF THIS FORM ARE OBSOLETE

PROJECT NO. 5935-3297-01

APPROVED 17 Dec 58 REVISED (A) 10 Jan 63 (B) 27 Feb 70 (C) 5 Nov 70 (D) 13 Oct 76 (E) 10 May 1982

User activities: Army - AT, AV, ME; Navy - MC, SH, OS; Air Force -

Review activities: Army - MU, MI; Navy - EC, OS; Air Force -

This military standard is approved for use by all Departments and Agencies of the Department of Defense. Selection for all new engineering and design applications and for repetitive use shall be made from this document when applicable.

This military standard is approved for use by all Departments and Agencies of the Department of Defense. Selection for all new engineering and design applications and for repetitive use shall be made from this document when applicable.

Review activities: Army - MU, MI; Navy - EC, OS; Air Force -

User activities: Army - AT, AV, ME; Navy - MC, SH, OS; Air Force -

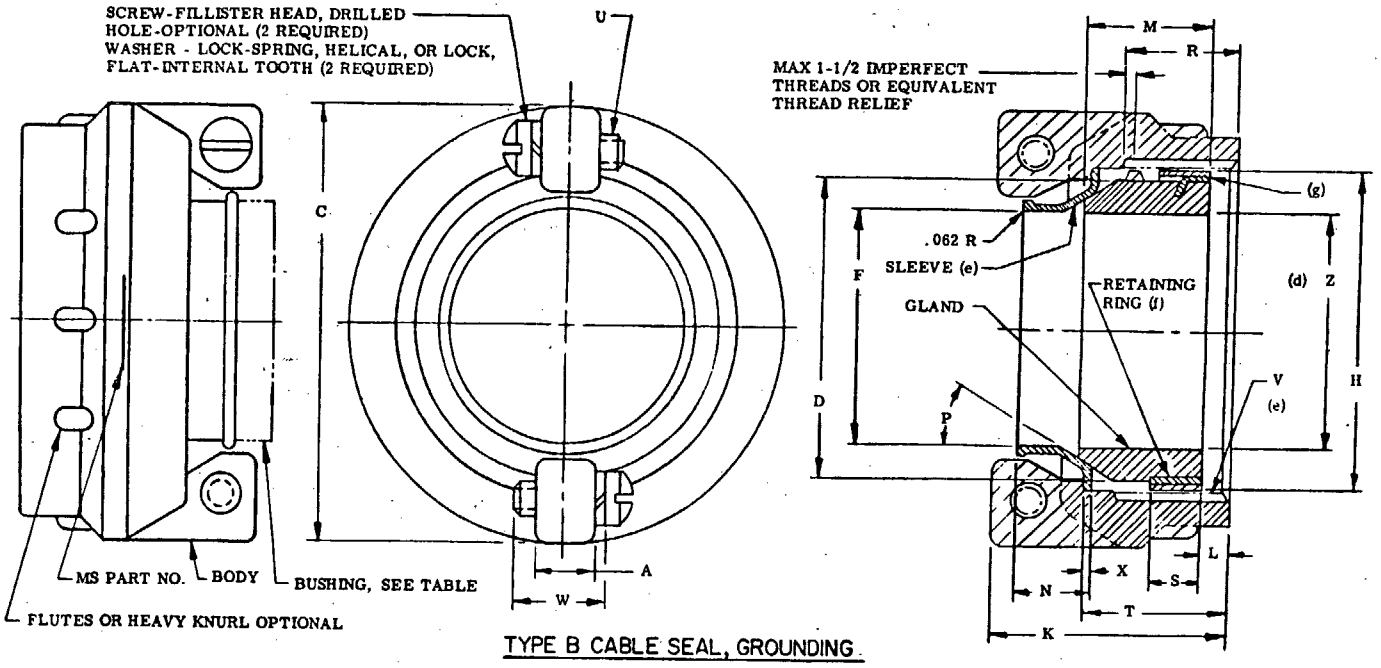


TYPE B CABLE SEAL, GROUNDING

(d) FOR ADDITIONAL CLOSEDOWN OF THE Z DIMENSION, BUSHINGS MS3420-3A THROUGH MS3420-40A MAY BE USED. DIAMETER Z SHALL BE FREE OF OBSTRUCTIONS.
(e) APPLY LUBRICANT, VV-P-236 TO THREADS AND SURFACES OF SLEEVE.
(f) RETAINING RING TO BE BONDED IN RUBBER GLAND.
(g) SERRATIONS AT BASE OF RETAINING RING MAY BE COVERED WITH A MAXIMUM OF .013 RUBBER FOR SIZES 3B THROUGH 10B, IF COVERED, THE RUBBER SHALL BE MOLDED TO THE CONTOUR OF THE SERRATIONS.

NOTES:

6. DIMENSIONS IN INCHES. UNLESS OTHERWISE SPECIFIED, TOLERANCES: DECIMALS ±.016. ANGLES ±2°. DIMENSIONS AND TOLERANCING IN ACCORDANCE WITH ANSI Y14.5-1973. SEE SHEET 3 FOR TABULATED DIMENSIONS.
7. MATERIAL: BODY, ALUMINUM ALLOY, QQ-A-225/5, TEMPER T4; QQ-A-601 OR QQ-A-591, ALLOY NO. 13, 218, 380, OR SC114A.
   SLEEVE, ALUMINUM, AMS4025 OR QQ-A-225.
   GLAND, RUBBER, AMS3209, DUROMETER "A" 70 ± 5.
   RETAINING RING, BRASS, SAE 70, HARD TEMPER ONLY.
8. FINISH: BODY, SCREWS AND WASHERS - CADMIUM PLATE, SPECIFICATION QQ-P-416, TYPE II, CLASS 3; COLOR, DULL OLIVE DRAB, ELECTRICALLY CONDUCTIVE.
   SLEEVE - SPECIFICATION MIL-C-5541. THE PORTION OF THE SLEEVE IN CONTACT WITH THE BODY SHALL BE COATED WITH POLYTETRAFLUOROETHYLENE RESIN FOR SIZES 3B THRU 10B.
9. THREADS IN ACCORDANCE WITH MIL-S-7742.
10. REMOVE ALL BURRS AND SHARP EDGES.

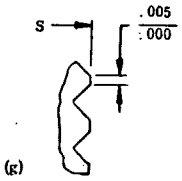


SIDE VIEW OF SERRATIONS ON RETAINING RING (20 SERRATIONS PER INCH)

FED. SUP CLASS 5935

APPROVED 17 Dec 58 REVISED (E) FOR CHANGES SEE SHEET 1

P.A NAVY - AS

Other Cust Army - EL USAF - 85

International interest

Procurement Specification MIL-C-5015

SUPERSEDES: AN3057

TITLE CLAMPS, CABLE, ELECTRICAL CONNECTOR

MILITARY STANDARD

MS3057

PAGE 2 OF 8

DD FORM 1 MAY 73 672 (Coordinated) PREVIOUS EDITIONS OF THIS FORM ARE OBSOLETE.

This military standard is approved for use by all Departments and Agencies of the Department of Defense. Selection for all new engineering and design applications and for repetitive use shall be made from this document when applicable.

Review activities: Army - MU, MI
Navy - EC, OS
Air Force -

User activities: Army - AT, AV, ME
Navy - MC, SH, OS
Air Force -

## TYPE B CABLE SEAL, GROUNDING

| DASH NO. (h) | CONNECTOR SHELL SIZE (REF) (i) | A +.031 -.016 | C MAX | D +.000 -.020 DIA GLAND | F +.020 -.000 DIA | H +.000 -.020 DIA | K MAX | L MIN | M ±.031 | N | P ±2° | R MIN |
|---|---|---|---|---|---|---|---|---|---|---|---|---|
| -3B | 8S AND 10S | .188 | .812 | .389 | .231 | .441 | 1.031 | .156 | .473 | .254 | 20° | .531 |
| -4B | 10SL, 12S AND 12 | | .937 | .510 | .315 | .560 | | | | | | |
| -6B | 14S AND 14 | | 1.062 | .627 | .440 | .676 | | | | | 30° | |
| -8B | 16S AND 16 | | 1.188 | .744 | .515 | .800 | | | | | | |
| -10B | 18 | | 1.312 | .870 | .614 | .926 | 1.094 | | .537 | .281 | | |
| -12B | 20 AND 22 | .250 | 1.562 | 1.037 | .738 | 1.107 | 1.219 | | .625 | .320 | | |
| -16B | 24 AND 28 | | 1.750 | 1.286 | .926 | 1.357 | | | .662 | .344 | | |
| -20B | 32 | .312 | 2.250 | 1.590 | 1.200 | 1.670 | 1.344 | | .940 | .406 | 35° | .562 |
| -24B | 36 | | 2.375 | 1.844 | 1.363 | 1.920 | 1.547 | | | | | .781 |
| -28B | 40 | | 2.625 | 2.083 | 1.611 | 2.162 | | | | | | |
| -32B | 44 | .375 | 2.812 | 2.332 | 1.865 | 2.412 | 1.734 | .188 | 1.047 | .500 | | |
| -40B | 48 | | 3.312 | 2.832 | 2.365 | 2.912 | 1.781 | | | | | |

| DASH NO. (h) | S | T | U THREAD | V THREAD | W MIN | X | Z DIA APPROX (GLAND) FREE | Z DIA APPROX (GLAND) CLOSED | BUSHING (REF) | MAX CABLE DIA |
|---|---|---|---|---|---|---|---|---|---|---|
| -3B | .200 | .641 | 6-32UNC-2A | .500-28 UNEF-2B | .281 | .025 +.010 -.003 | .219 | .031 | MS3420-3A | .219 |
| -4B | | | | .625-24 UNEF-2B | | | .312 | .094 | MS3420-4A | .312 |
| -6B | | | | .750-20 UNEF-2B | | | .438 | .250 | MS3420-6A | .438 |
| -8B | | | | .875-20 UNEF-2B | | | .531 | .312 | MS3420-8A | .515 |
| -10B | .218 | .672 | | 1.000-20 UNEF-2B | | .032 +.012 -.003 | .625 | .375 | MS3420-10A | .614 |
| -12B | .273 | .719 | 8-32UNC-2A | 1.188-18 UNEF-2B | .344 | | .750 | .500 | MS3420-12A | .738 |
| -16B | | | | 1.438-18 UNEF-2B | | | .938 | .594 | MS3420-16A | .926 |
| -20B | .431 | .797 | 10-32UNF-2A | 1.750-18 UNS-2B | .406 | .051 ±.005 | 1.250 | .938 | MS3420-20A | 1.200 |
| -24B | | 1.016 | | 2.000-18 UNS-2B | | | 1.375 | .969 | MS3420-24A | 1.363 |
| -28B | | | | 2.250-16 UN-2B | | | 1.625 | 1.188 | MS3420-28A | 1.611 |
| -32B | .500 | 1.172 | | 2.500-16 UN-2B | | .064 ±.005 | 1.875 | 1.375 | MS3420-32A | 1.865 |
| -40B | | 1.234 | | 3.000-16 UN-2B | | | 2.375 | 1.875 | MS3420-40A | 2.365 |

(h) PART NUMBERS MS3057-3B THROUGH -40B ARE INTERCHANGEABLE WITH PART NUMBERS AN3057-3B THROUGH -40B.

(i) CLAMP MATES WITH CONNECTOR SHELL SIZE LISTED IN THIS COLUMN.

APPROVED 17 Dec 58 REVISED (E) FOR CHANGES SEE SHEET 1

FED. SUP CLASS 5935

P.A Navy - AS
Other Cust Army - EL USAF - 85
International interest
Procurement Specification MIL-C-5015
SUPERSEDES: AN3057
TITLE CLAMPS, CABLE, ELECTRICAL CONNECTOR
MILITARY STANDARD
MS3057
PAGE 3 OF 8

DD FORM 1 MAY 73 672 (Coordinated) PREVIOUS EDITIONS OF THIS FORM ARE OBSOLETE.

This military standard is approved for use by all Departments and Agencies of the Department of Defense. Selection for all new engineering and design applications and for repetitive use shall be made from this document when applicable.

Review activities: Army - MU, MI; Navy - EC, OS; Air Force -

User activities: Army - AT, AV, ME; Navy - MC, SH, OS; Air Force -

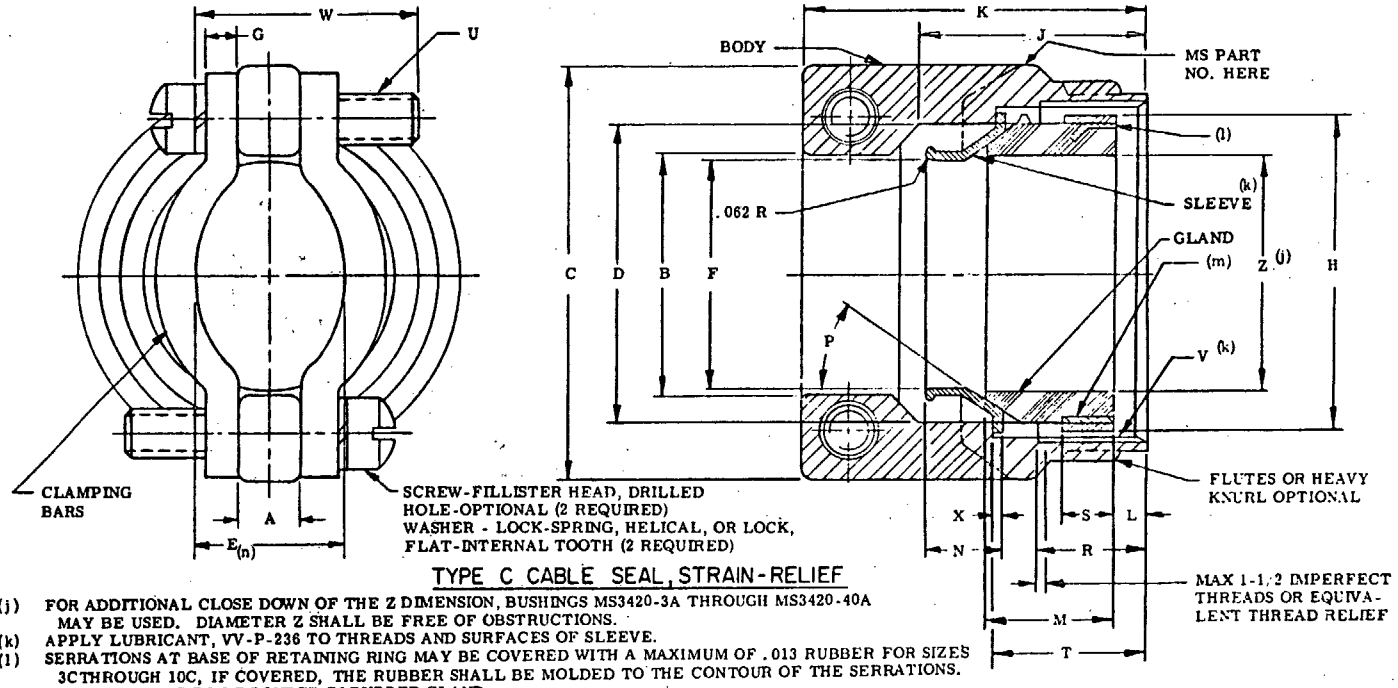


TYPE C CABLE SEAL, STRAIN-RELIEF

(j) FOR ADDITIONAL CLOSE DOWN OF THE Z DIMENSION, BUSHINGS MS3420-3A THROUGH MS3420-40A MAY BE USED. DIAMETER Z SHALL BE FREE OF OBSTRUCTIONS.
(k) APPLY LUBRICANT, VV-P-236 TO THREADS AND SURFACES OF SLEEVE.
(l) SERRATIONS AT BASE OF RETAINING RING MAY BE COVERED WITH A MAXIMUM OF .013 RUBBER FOR SIZES 3C THROUGH 10C, IF COVERED, THE RUBBER SHALL BE MOLDED TO THE CONTOUR OF THE SERRATIONS.
(m) RETAINING RING TO BE BONDED IN RUBBER GLAND.
(n) "E" MIN WITH CLAMPING BARS FULLY OPENED SHALL BE NO LESS THAN "B" DIMENSION.

NOTES:

11. DIMENSIONS IN INCHES. UNLESS OTHERWISE SPECIFIED, TOLERANCES: DECIMALS ± .016. ANGLES ± 2°. DIMENSIONS AND TOLERANCING IN ACCORDANCE WITH ANSI Y14.5-1973. SEE SHEET 5 FOR TABULATED DIMENSIONS.
12. MATERIAL: BODY, ALUMINUM ALLOY, QQ-A-225/5, TEMPER T4; QQ-A-601 OR QQ-A-591, ALLOY NO. 13, 218, 380, OR SC114A.
    SLEEVE, ALUMINUM, AMS4025 OR QQ-A-225
    GLAND, RUBBER, AMS3209, DUROMETER "A" 70 ± 5.
    RETAINING RING, BRASS, SAE70, HARD TEMPER ONLY.
    CLAMPING BARS, ALUMINUM QQ-A-250/8 TEMPER H32.
13. FINISH: BODY, SCREWS AND WASHERS - CADMIUM PLATE, SPECIFICATION QQ-P-416, TYPE II, CLASS 3; COLOR, DULL OLIVE DRAB, ELECTRICALLY CONDUCTIVE.
    SLEEVE - SPECIFICATION MIL-C-5541. THE PORTION OF THE SLEEVE IN CONTACT WITH THE BODY SHALL BE COATED WITH POLYTETRAFLUOROETHYLENE RESIN FOR SIZES 3C THRU 10C.
14. THREADS IN ACCORDANCE WITH MIL-S-7742.
15. REMOVE ALL BURRS AND SHARP EDGES.

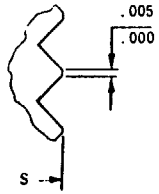


(l) SIDE VIEW OF SERRATIONS ON RETAINING RING (20 SERRATIONS PER INCH)

APPROVED 17 Dec 58 REVISED (E) FOR CHANGES SEE SHEET 1

FED. SUP CLASS 5935

P.A Navy - AS
Other Cust Army - EL USAF - 85
International Interest
Procurement Specification MIL-C-5015
SUPERSEDES: AN3057
TITLE CLAMPS, CABLE, ELECTRICAL CONNECTOR
MILITARY STANDARD
MS3057
PAGE 4 OF 8

DD FORM 1 MAY 73 672 (Coordinated) PREVIOUS EDITIONS OF THIS FORM ARE OBSOLETE.

This military standard is approved for use by all Departments and Agencies of the Department of Defense. Selection for all new engineering and design applications and for repetitive use shall be made from this document when applicable.

Review activities: Army - MU, MI; Navy - EC, OS; Air Force -

User activities: Army - AT, AV, ME; Navy - MC, SH, OS; Air Force -

## TYPE C CABLE SEAL, STRAIN RELIEF

| DASH NO. | CONNECTOR SHELL SIZE (REF) (o) | A +.031 -.016 | B MIN CABLE CLEARANCE | C MAX | D +.000 -.020 DIA GLAND | E MAX CLOSED | F +.020 -.000 DIA | G ± .016 | H +.000 -.020 DIA | J ±.020 | K MAX | L MIN | M ±.031 | N | P | R MIN |
|---|---|---|---|---|---|---|---|---|---|---|---|---|---|---|---|---|
| -3C | 8S AND 10S | .188 | .239 | .812 | .389 | .217 | .231 | .125 | .441 | .875 | 1.375 | .156 | .473 | .254 | 20° | .531 |
| -4C | 10SL, 12S AND 12 | | .317 | .937 | .510 | .296 | .315 | | .560 | | | | | | | |
| -6C | 14S AND 14 | | .443 | 1.062 | .627 | .390 | .440 | | .676 | | | | | | 30° | |
| -8C | 16S AND 16 | | .551 | 1.188 | .744 | .434 | .515 | | .800 | | | | | | | |
| -10C | 18 | | .630 | 1.312 | .870 | | .614 | | .926 | .927 | 1.437 | | .537 | .281 | | |
| -12C | 20 AND 22 | .250 | .771 | 1.562 | 1.037 | .596 | .738 | .156 | 1.107 | 1.016 | | | .625 | .320 | | |
| -16C | 24 AND 28 | | .959 | 1.750 | 1.286 | | .926 | | 1.357 | 1.037 | 1.562 | | | .344 | | |
| -20C | 32 | .312 | 1.271 | 2.250 | 1.590 | .858 | 1.200 | | 1.670 | 1.167 | 1.812 | | .662 | | 35° | .562 |
| -24C | 36 | | 1.396 | 2.375 | 1.844 | | 1.363 | | 1.920 | 1.386 | 2.062 | | .940 | .406 | | .781 |
| -28C | 40 | | 1.646 | 2.625 | 2.083 | 1.107 | 1.611 | .188 | 2.162 | | | | | | | |
| -32C | 44 | .375 | 1.896 | 2.812 | 2.332 | 1.421 | 1.865 | | 2.412 | 1.480 | 2.188 | .188 | 1.047 | .500 | | |

| DASH NO. | S | T | U THREAD | V THREAD | W MIN | X | Z DIA APPROX (GLAND) FREE | Z DIA APPROX (GLAND) CLOSED | BUSHING (REF) | MAX CABLE DIA |
|---|---|---|---|---|---|---|---|---|---|---|
| -3C | .200 | .641 | 6-32UNC-2A | .500-28 UNEF-2B | .469 | .025 +.010 -.003 | .219 | .031 | MS3420-3A | .219 |
| -4C | | | | .625-24 UNEF-2B | .594 | | .312 | .094 | MS3420-4A | .312 |
| -6C | | | | .750-20 UNEF-2B | | | .438 | .250 | MS3420-6A | .438 |
| -8C | | | | .875-20 UNEF-2B | .719 | | .531 | .312 | MS3420-8A | .515 |
| -10C | .218 | .672 | | 1.000-20 UNEF-2B | | .032 +.012 -.003 | .625 | .375 | MS3420-10A | .614 |
| -12C | .273 | .719 | 8-32UNC-2A | 1.188-18 UNEF-2B | .844 | | .750 | .500 | MS3420-12A | .738 |
| -16C | | | | 1.438-18 UNEF-2B | 1.062 | | .938 | .594 | MS3420-16A | .926 |
| -20C | .431 | .797 | 1/4-20UNC-2A | 1.750-18 UNS-2B | 1.187 | .051 ±.005 | 1.250 | .938 | MS3420-20A | 1.200 |
| -24C | | 1.016 | | 2.000-18 UNS-2B | 1.312 | | 1.375 | .969 | MS3420-24A | 1.363 |
| -28C | | | | 2.250-16 UN-2B | | | 1.625 | 1.188 | MS3420-28A | 1.611 |
| -32C | .500 | 1.172 | | 2.500-16 UN-2B | | .064 ±.005 | 1.875 | 1.375 | MS3420-32A | 1.865 |

(o) CLAMP MATES WITH CONNECTOR SHELL SIZE LISTED IN THIS COLUMN.

APPROVED 17 Dec 58 REVISED (E) FOR CHANGES SEE SHEET 1

FED. SUP CLASS 5935

P.A Navy - AS
Other Cust Army - EL USAF - 85
International interest

Procurement Specification MIL-C-5015

SUPERSEDES: AN3057

TITLE CLAMPS, CABLE, ELECTRICAL CONNECTOR

MILITARY STANDARD MS3057



DD FORM 1 MAY 73 672 (Coordinated) PREVIOUS EDITIONS OF THIS FORM ARE OBSOLETE.

This military standard is approved for use by all Departments and Agencies of the Department of Defense. Selection for all new engineering and design applications and for repetitive use shall be made from this document when applicable.

Review activities: Army - MU, MI
Navy - EC, OS
Air Force -

User activities: Army - AT, AV, ME
Navy - MC, SH, OS
Air Force -

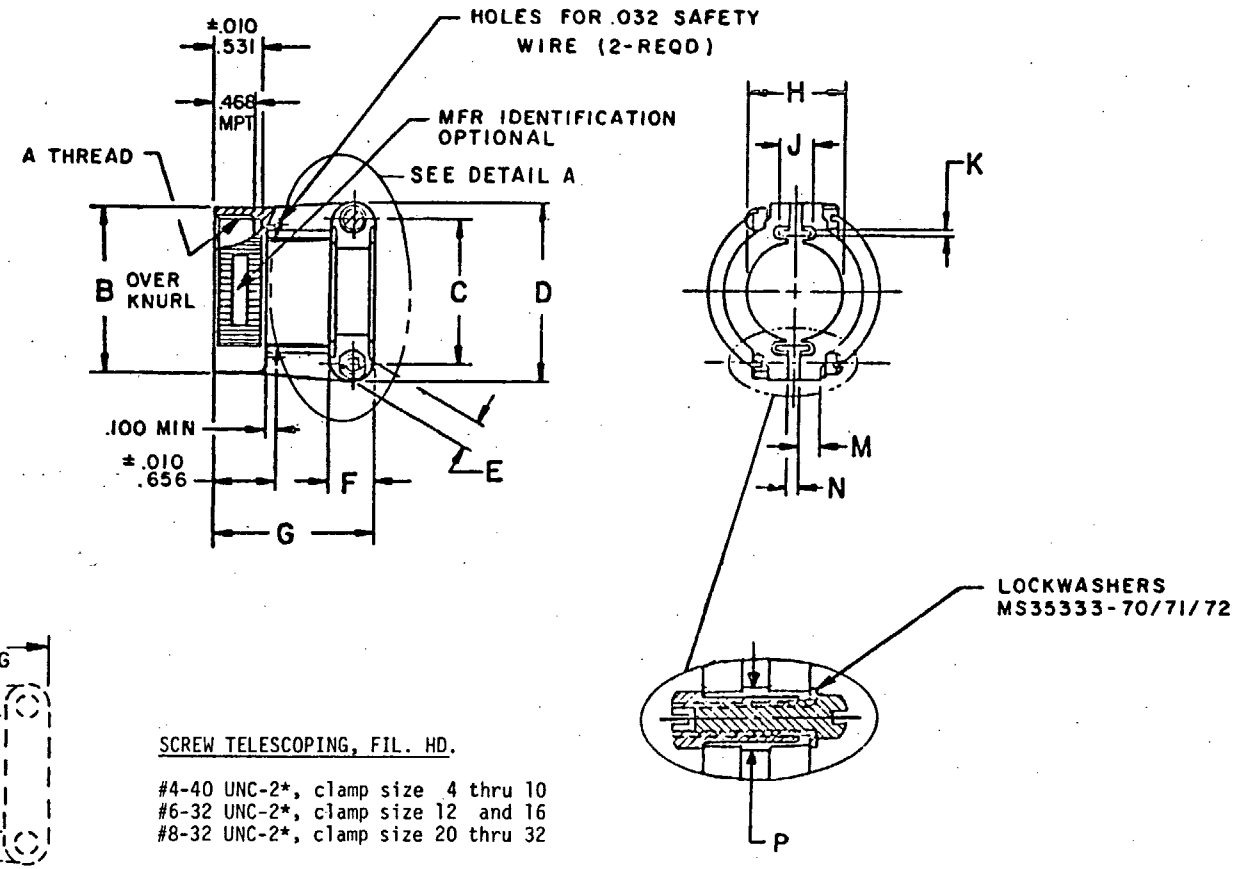


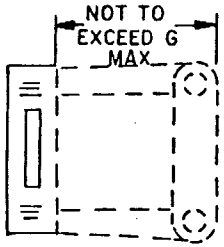


DESIGN OPTIONAL STAINLESS STEEL

DETAIL A

SCREW TELESCOPING, FIL. HD.

#4-40 UNC-2*, clamp size 4 thru 10
#6-32 UNC-2*, clamp size 12 and 16
#8-32 UNC-2*, clamp size 20 thru 32

Type D - Cable clamp, heavy duty, high shock

FED. SUP CLASS 5935

APPROVED 17 Dec 58 REVISED (E) FOR CHANGES SEE SHEET 1

P.A Navy - AS
Other Cust Army - EL USAF - 85

International interest

Procurement Specification MIL-C-5015

SUPERSEDES: AN3057

TITLE CLAMPS, CABLE, ELECTRICAL CONNECTOR

MILITARY STANDARD

MS3057



DD FORM 1 MAY 73 672 (Coordinated) PREVIOUS EDITIONS OF THIS FORM ARE OBSOLETE.

This military standard is approved for use by all Departments and Agencies of the Department of Defense. Selection for all new engineering and design applications and for repetitive use shall be made from this document when applicable.

Review activities: Army - MU, MI
Navy - EC, OS
Air Force -

User activities: Army - AT, AV, ME
Navy - MC, SH, OS
Air Force -

Type D - Cable clamp, heavy duty, high shock.

| Dash No. | A Thread Class 2A | B Dia Max | C ±.010 | D ±.020 | E +.000 -.007 | F ±.010 | G ±.020 | H Clamp Range Min | H Clamp Range Max | J Dia ±.010 | K ±.010 | M ±.010 | N ±.010 | P ±.005 | Test plug diameter (inches) Min | Test plug diameter (inches) Max | Pull-out load (pounds) | Clamp size range |
|---|---|---|---|---|---|---|---|---|---|---|---|---|---|---|---|---|---|---|
| -4D | .625-24 UNEF | .937 | .637 | .937 | .250 | .312 | 1.281 | .125 | .312 | .218 | .062 | .156 | .109 | .166 | .109 | .125 | 25 | 1 |
| -6D | .750-20 UNEF | 1.031 | .763 | 1.125 | .250 | .375 | 1.281 | .250 | .437 | .281 | .062 | .175 | .125 | .166 | .234 | .250 | | |
| -8D | .875-20 UNEF | 1.250 | .942 ±.032 | 1.312 | .250 | .422 ±.026 | 1.281 | .312 | .562 | .312 | .062 | .211 ±.018 | .125 | .166 | .296 | .312 | 50 | |
| -10D | 1.000-20 UNEF | 1.250 | .964 | 1.312 | .250 | .437 | 1.281 | .350 | .625 | .312 | .062 | .218 | .125 | .166 | .334 | .350 | | |
| -12D | 1.188-18 UNEF | 1.437 | 1.130 | 1.531 | .250 | .437 | 1.312 | .500 | .750 | .375 | .062 | .250 | .156 | .192 | .484 | .500 | | 2 |
| -16D | 1.438-18 UNEF | 1.688 | 1.375 | 1.750 | .250 | .531 | 1.406 | .625 | .937 | .375 | .062 | .250 | .188 | .192 | .609 | .625 | 75 | |
| -20D | 1.750-18 UNS | 2.000 | 1.703 | 2.093 | .312 | .531 | 1.593 | .875 | 1.250 | .475 | .078 | .312 | .188 | .217 | .859 | .875 | | |
| -24D | 2.000-18 UNS | 2.250 | 1.906 | 2.343 | .312 | .531 | 1.625 | 1.000 | 1.375 | .500 | .093 | .312 | .250 | .217 | .984 | 1.000 | | 3 |
| -28D | 2.250-16 UN | 2.500 | 2.218 | 2.750 | .312 | .812 | 1.900 | 1.250 | 1.625 | .625 | .093 | .312 | .375 | .217 | 1.234 | 1.250 | 100 | |
| -32D | 2.500-16 UN | 2.750 | 2.500 | 3.000 | .312 | .812 | 1.900 | 1.437 | 1.875 | .675 | .125 | .312 | .375 | .217 | 1.421 | 1.437 | | |

NOTE: Unless otherwise specified, tolerances shall be: .xx = ±.01; .xxx = ±.005; angular: x° = ±1°00'; x°xx' = ±0°30'.

Requirements:

A. Material: Clamp body and saddle - Aluminum alloy, per QQ-A-591, comp. 13,380 or A 380. clamp screws - AISI 300 series stainless steel.

B. Finish:

| Designator | Finish | |
|---|---|---|
| A | Cadmium plate, per QQ-P-416, type II, class 3, over nickel: Color - Olive drab. | |
| C | Cadmium plate, per QQ-P-416, type II, class 3; Color - Olive drab. | |
| N | Electroless nickel, per MIL-C-26074, class 3 or 4, grade B. | |
| D | Nonmagnetic corrosion resisting steel, per QQ-S-763, 300 series classes | Cadmium plate, per QQ-P-416, type II, class 3, color - black. |
| S | | Passivate |

Performance: MS3188, MS3189, MS3437 or other suitable back shells shall be used as the test fixture when necessary.

C. Magnetic permeability -

The relative magnetic permeability shall be less than 2.0 when checked with an indicator conforming to MIL-I-17214.

D. Vibration -

The assembly shall be subjected to the vibration requirements of MIL-STD-167-1(Ships) paragraph 5.1.3.3.3 and Method 204, condition B of MIL-STD-202. There shall be no loosening of parts or evidence of damage due to vibration. No safety wires shall be used.

E. Shock -

The assembly shall be subjected to the requirements of MIL-S-901, grade A. The clamp is a subassembly, class I, lightweight test classification (250 lbs. or less) type C. There shall be no loosening of parts or evidence of damage due to shock. No safety wires shall be used.

F. Salt spray (corrosion) -

Salt spray test in accordance with Method 1001 of MIL-STD-1344 test condition B. There shall be no exposure of basis metal due to corrosion.

G. Cable Pull-Out -

Cables shall not pull out when specified loads in table are applied, nor shall the slippage exceed .125 inch.

H. Quality assurance:

A. Examination of product.

I. Military part number: See example.

MS3057 - 16D A

Basic No.
Dash No.
Finish designator
See requirement B

User activities: Army - AT, AV, ME
Navy - MC, SH, OS
Air Force -

Review activities: Army - MU, MI
Navy - FC, OS
Air Force -

This military standard is approved for use by all Departments and Agencies of the Department of Defense. Selection for all new engineering and design applications and for repetitive use shall be made from this document when applicable.

APPROVED 17 Dec 58 REVISED (E) FOR CHANGES SEE SHEET 1